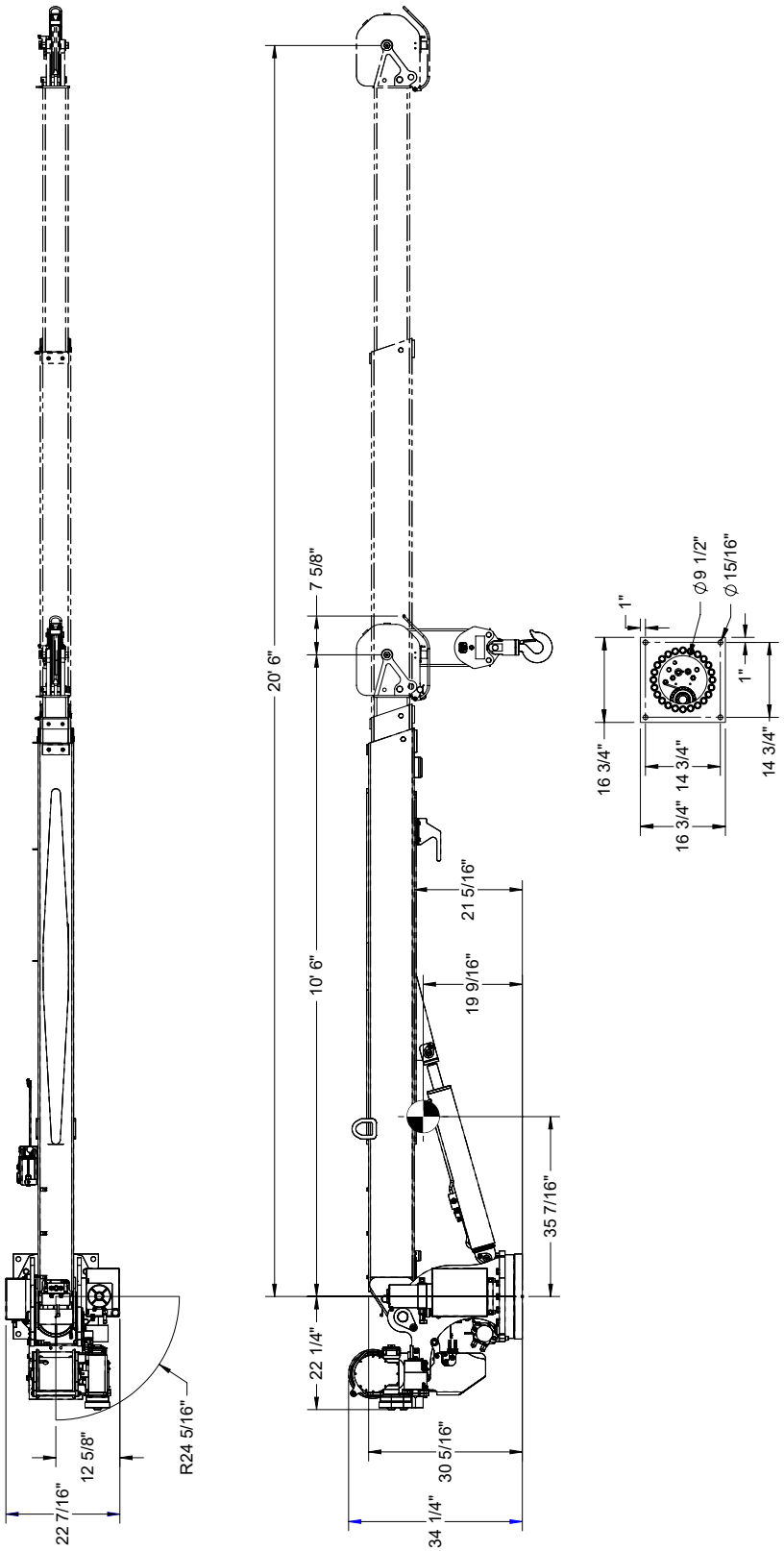General Dimensions