5005EH-24V CONTROL
GENERAL DIMENSIONS

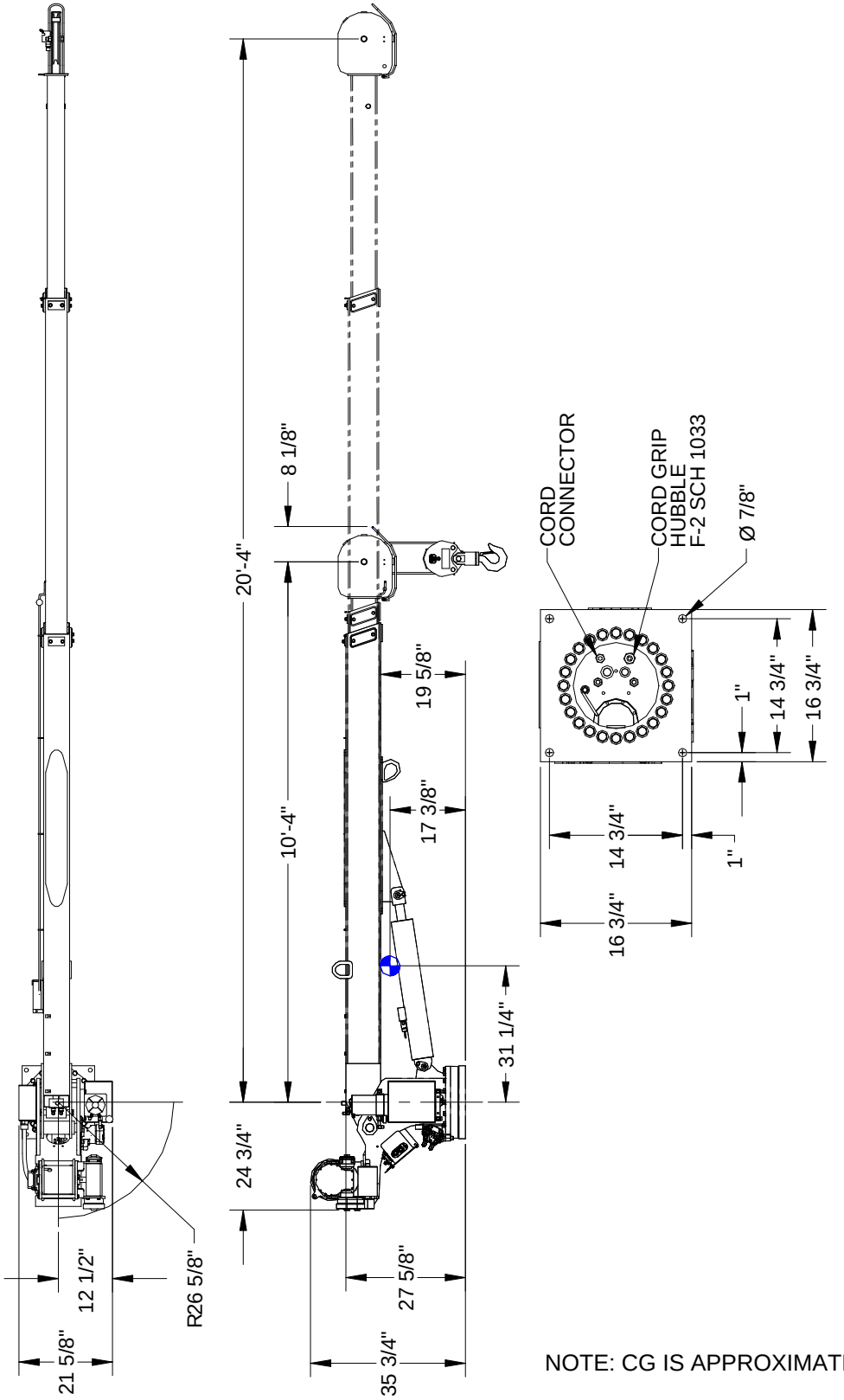

NOTE: CG IS APPROXIMATE