IC-200-2SJ
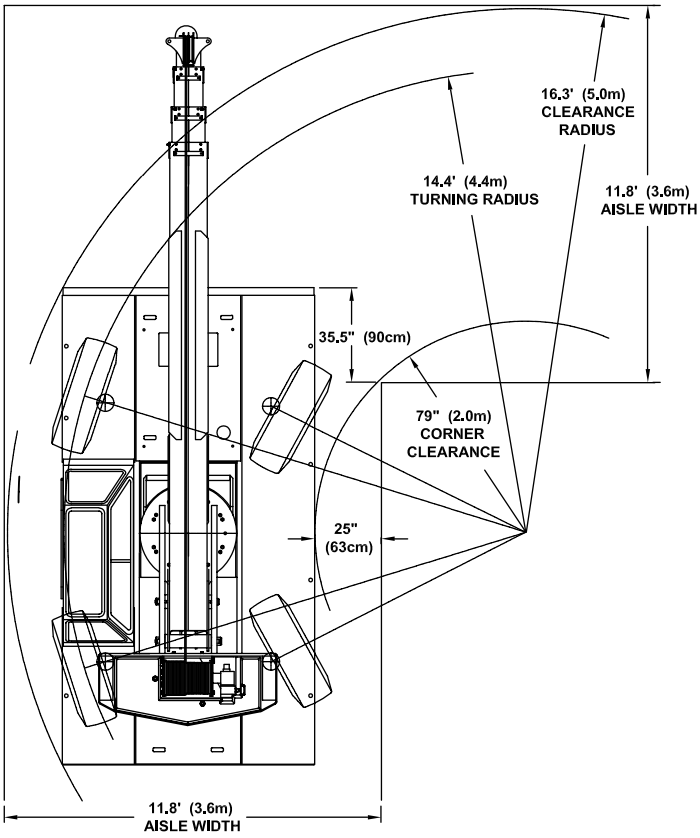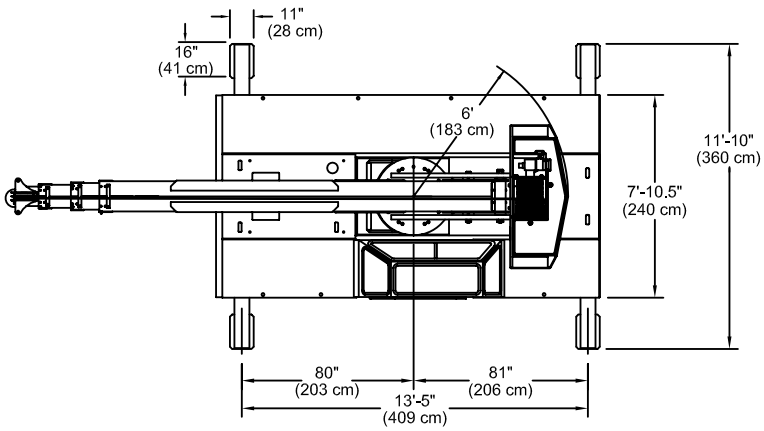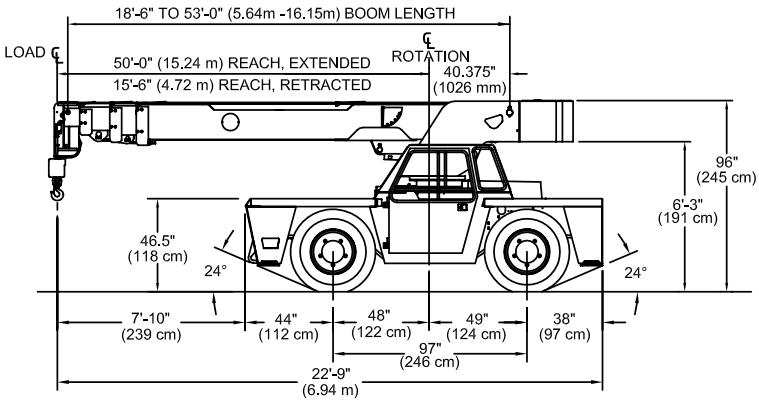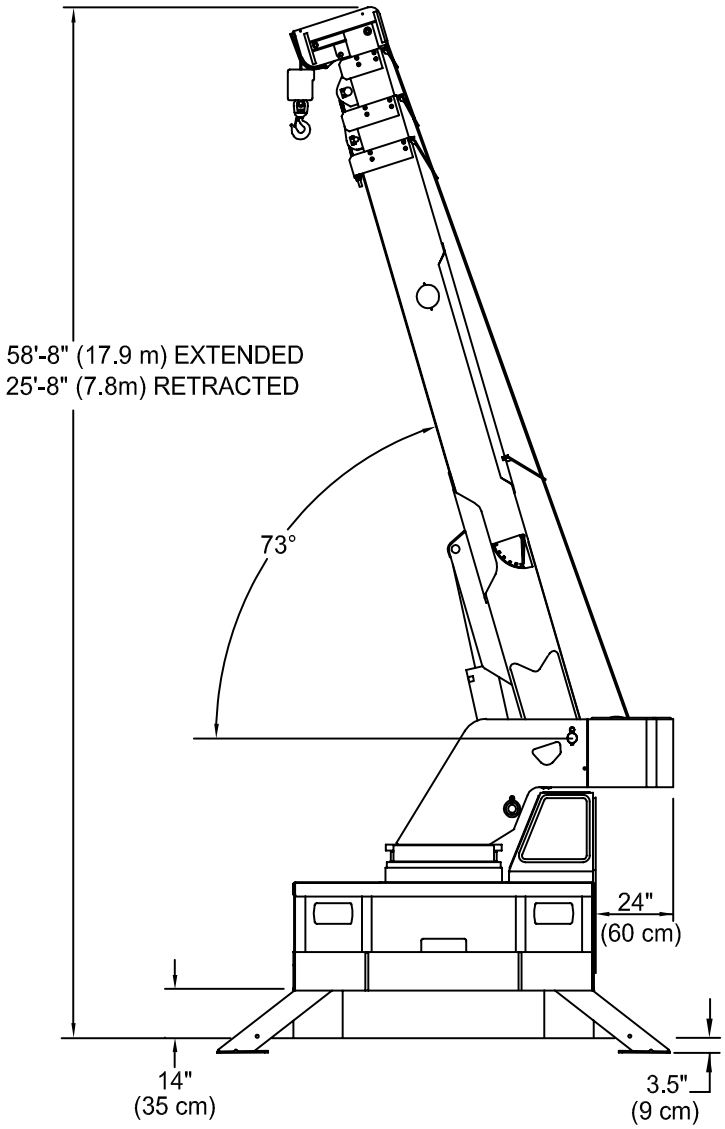
DIMENSIONS