BMC BRODERSON® Manufacturing Corp.
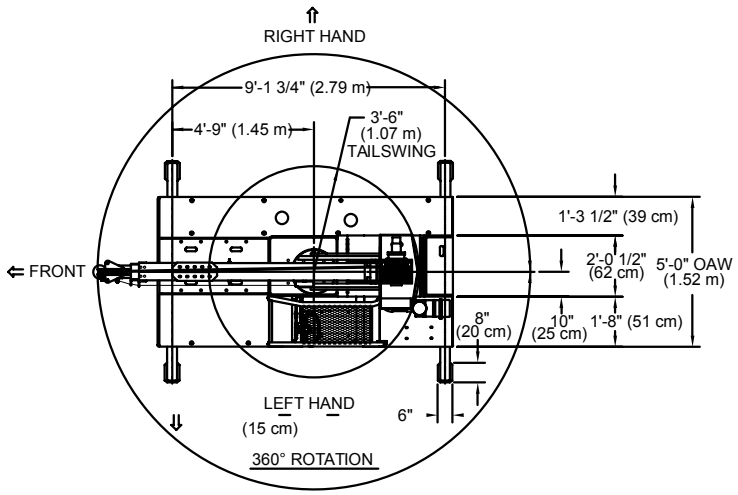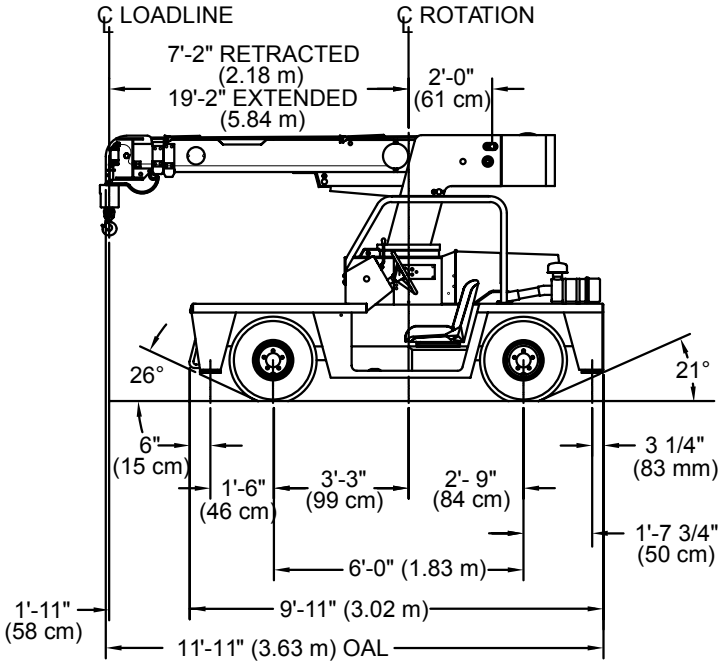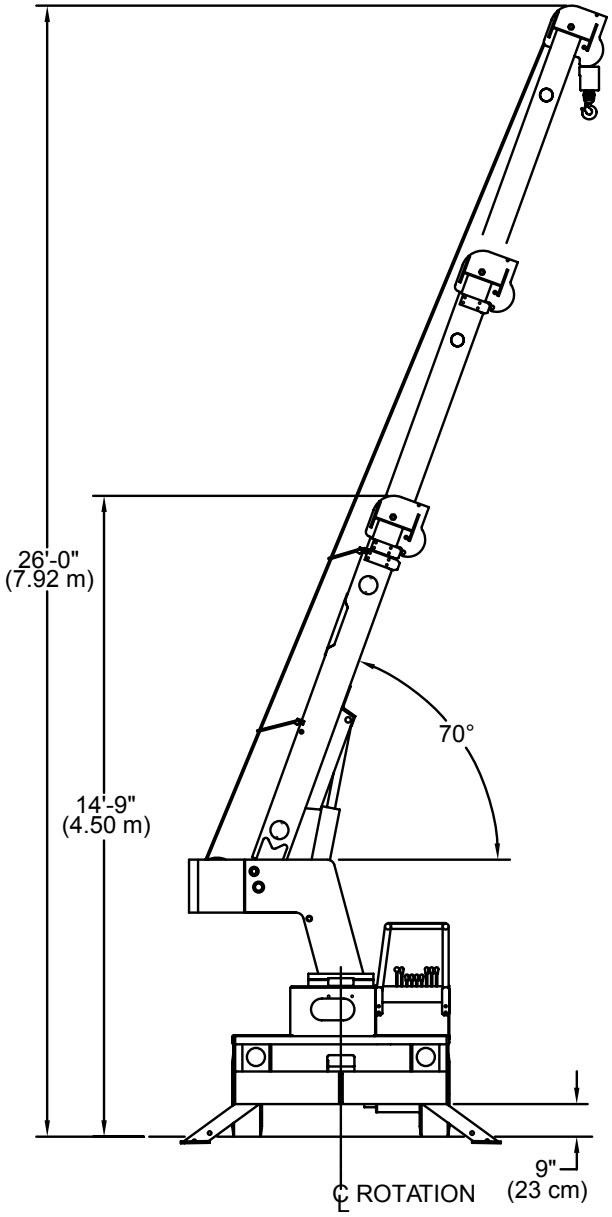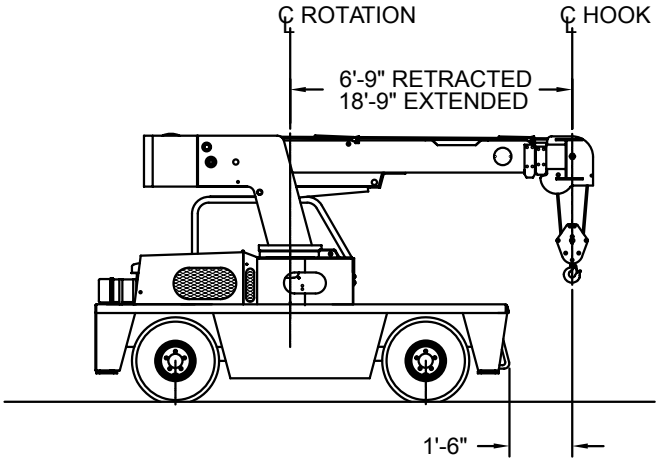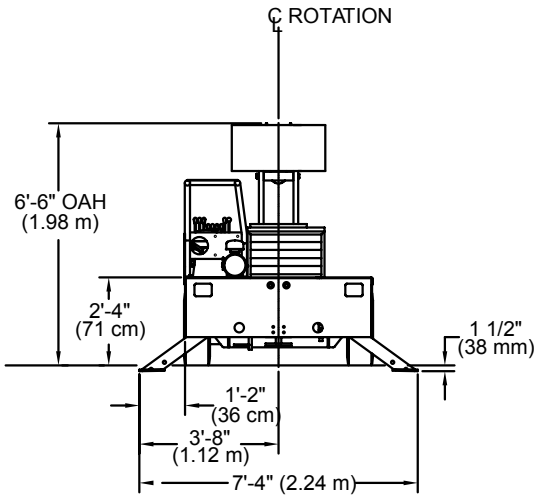
IC-35-G
DIMENSIONS