BMC® BRODERSON® Manufacturing Corp.
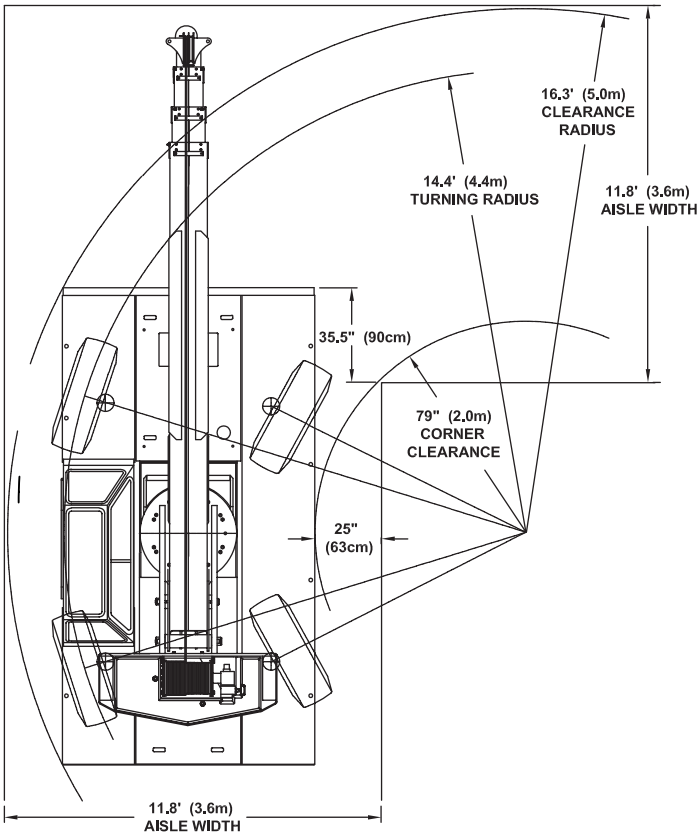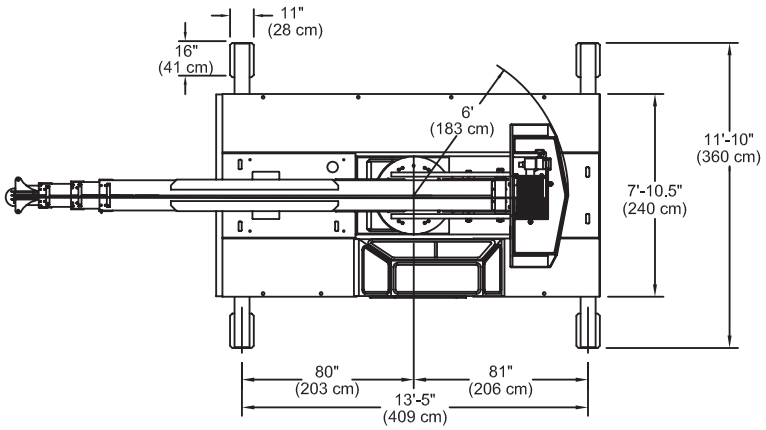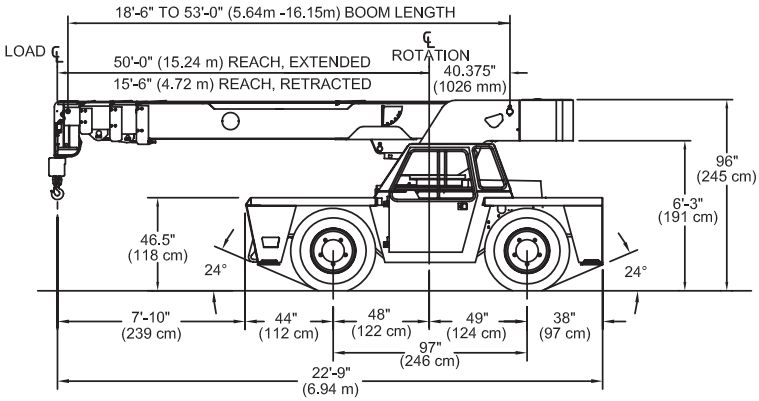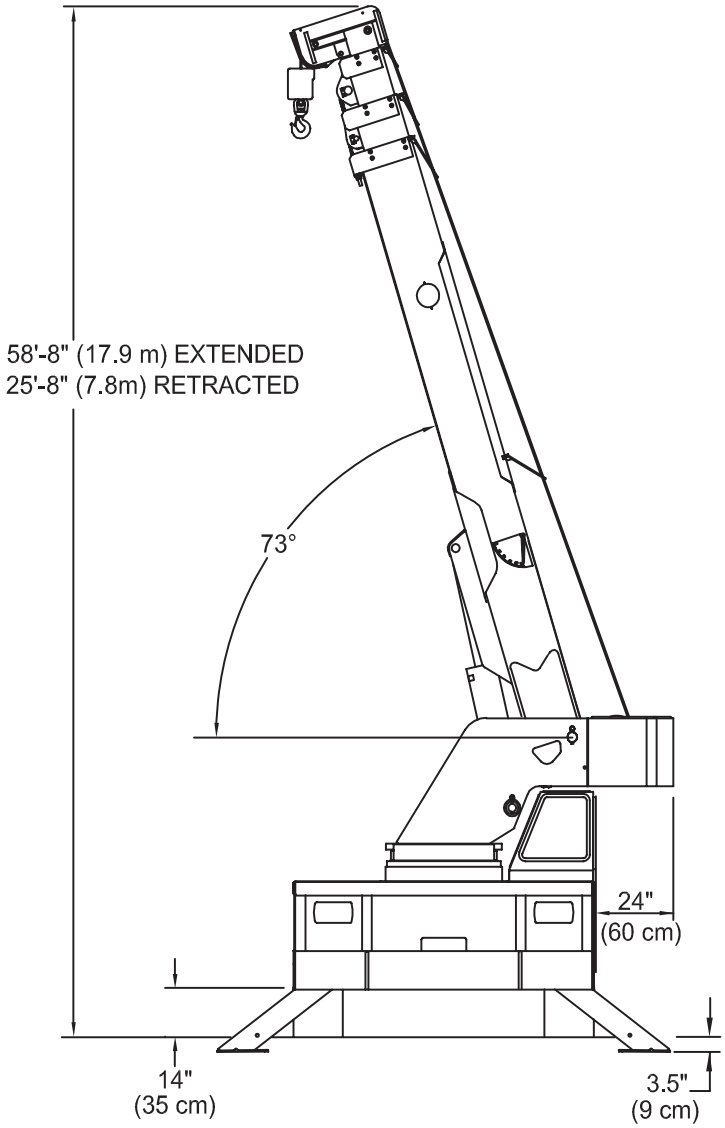
IC-200-3J
DIMENSIONS