BMC BRODERSON® Manufacturing Corp.
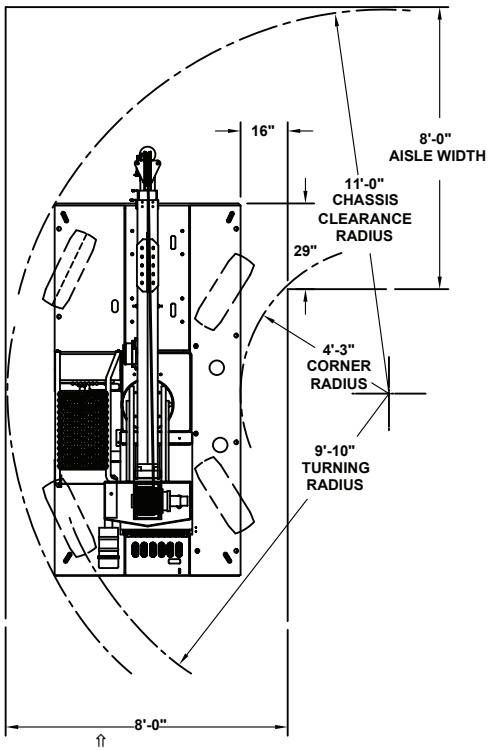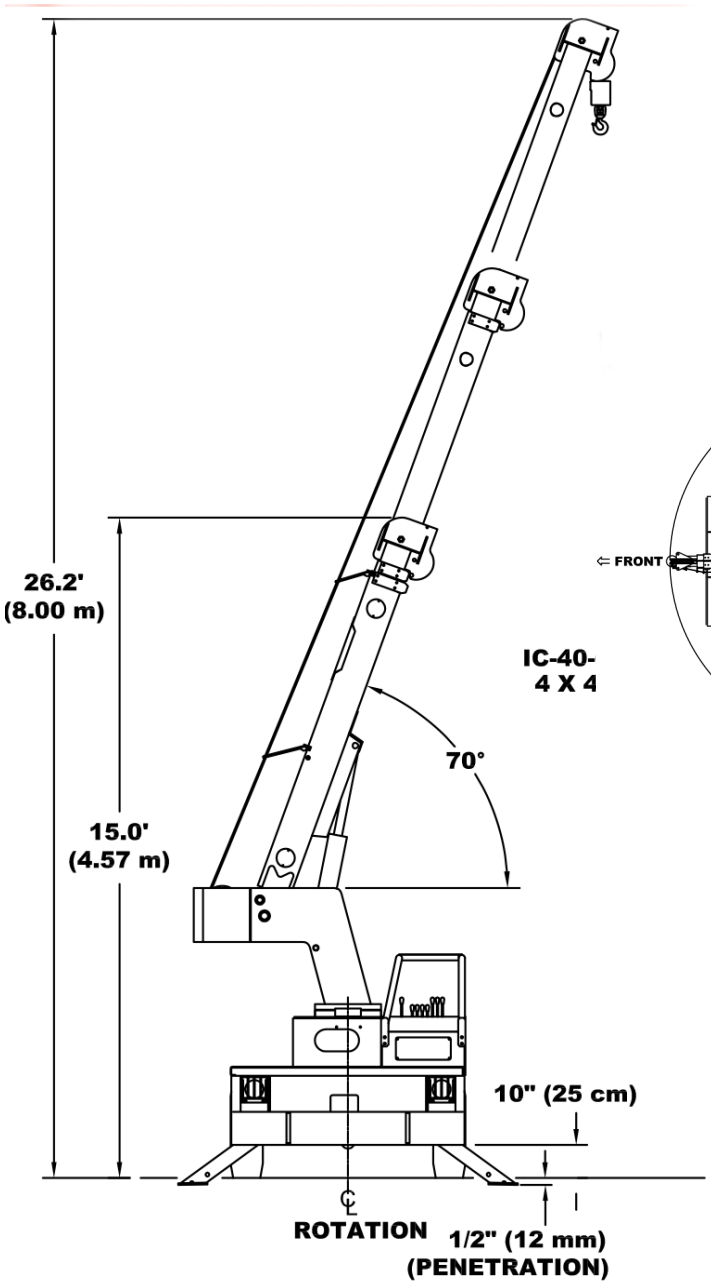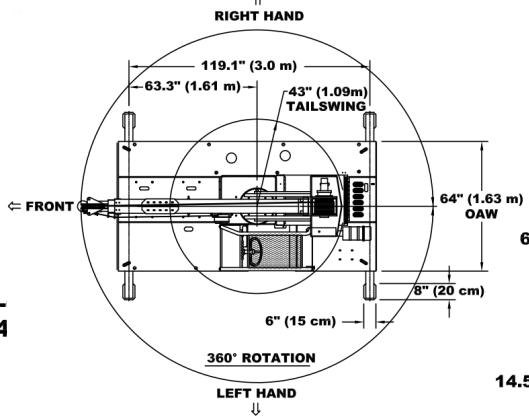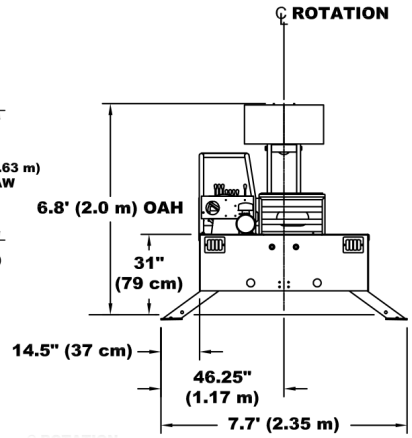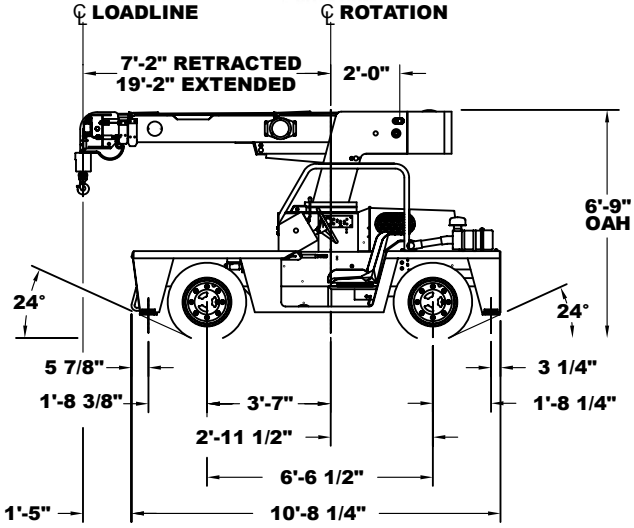
# IC-40-D
## DIMENSIONS