IC-400-C
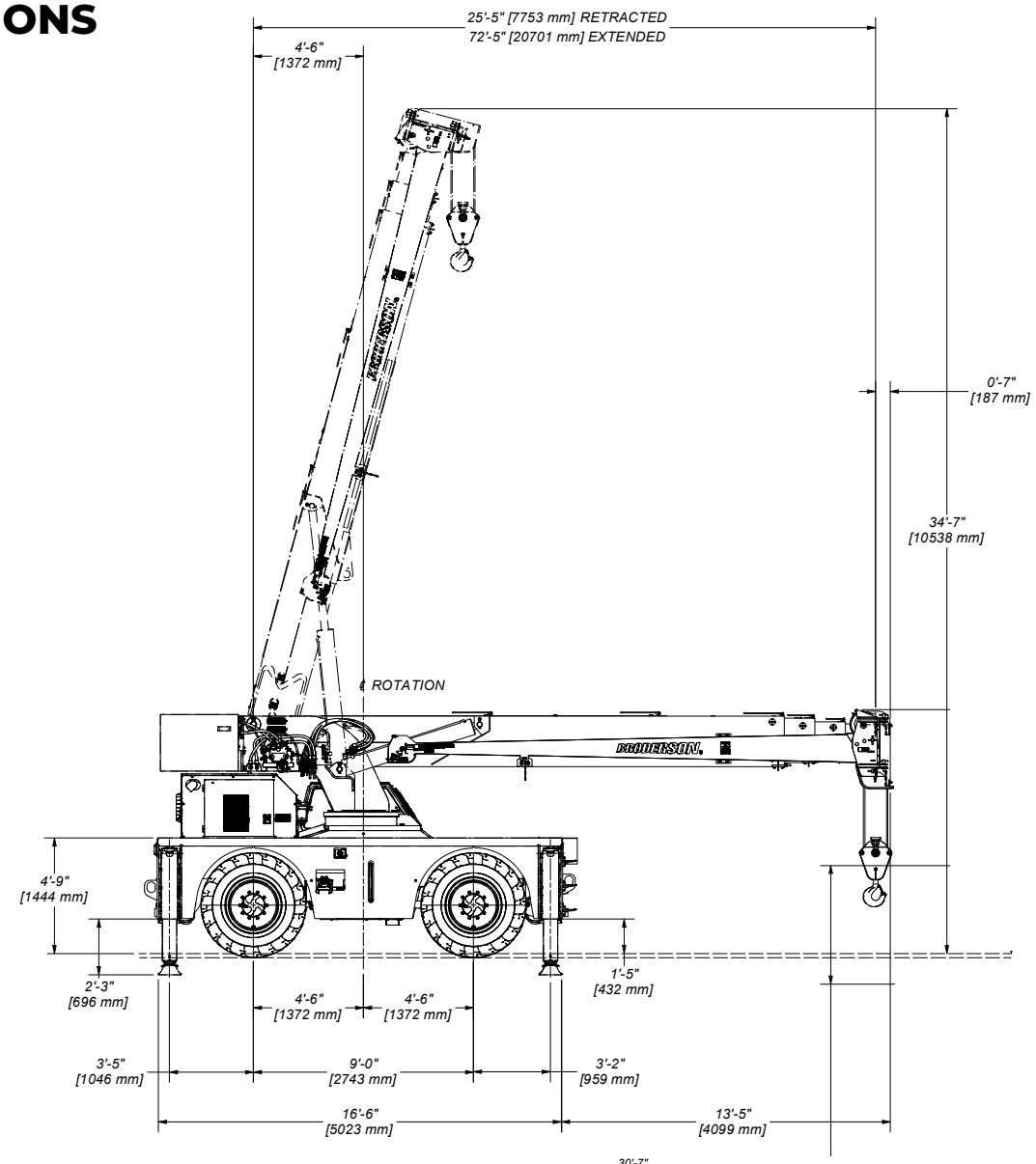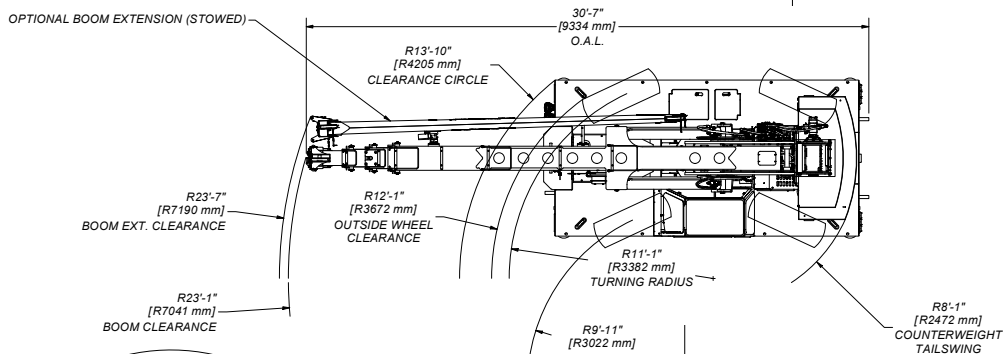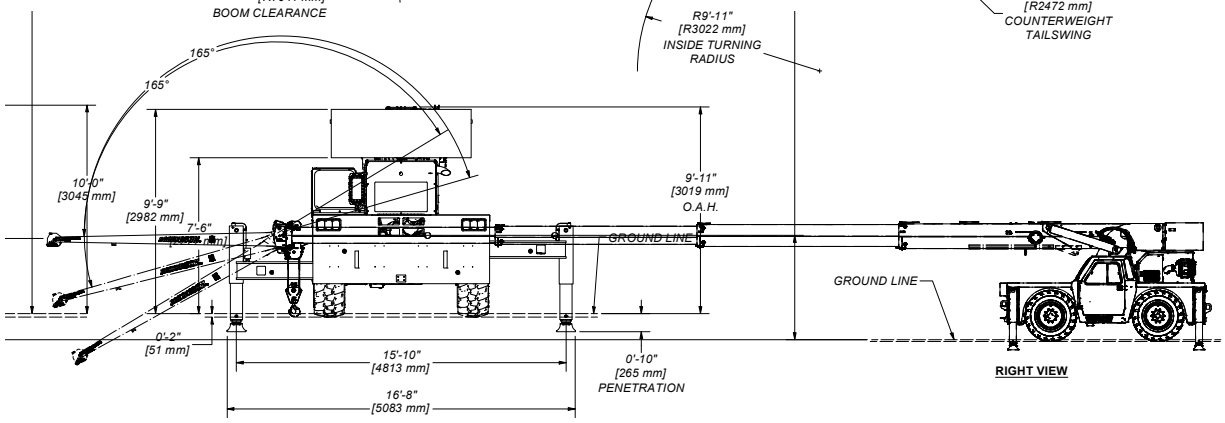
DIMENSIONS