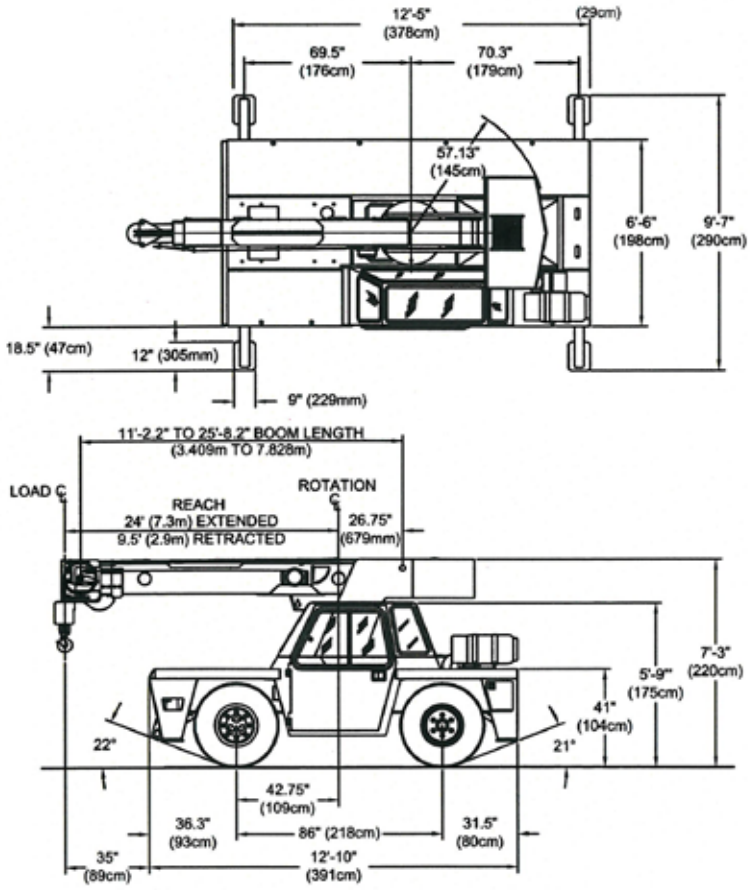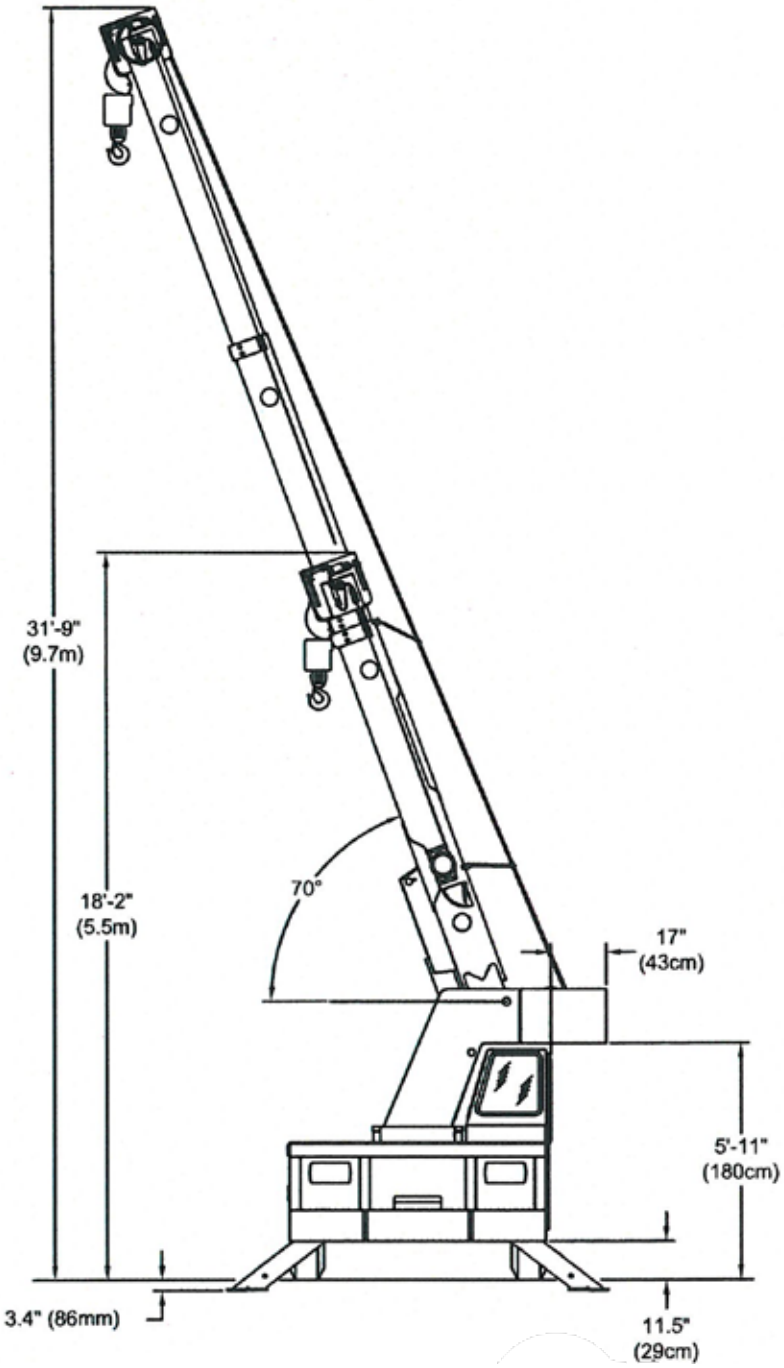IC-80-L
SPECIFICATIONS