71000 E A.S.C. Plus

71000 E7F184

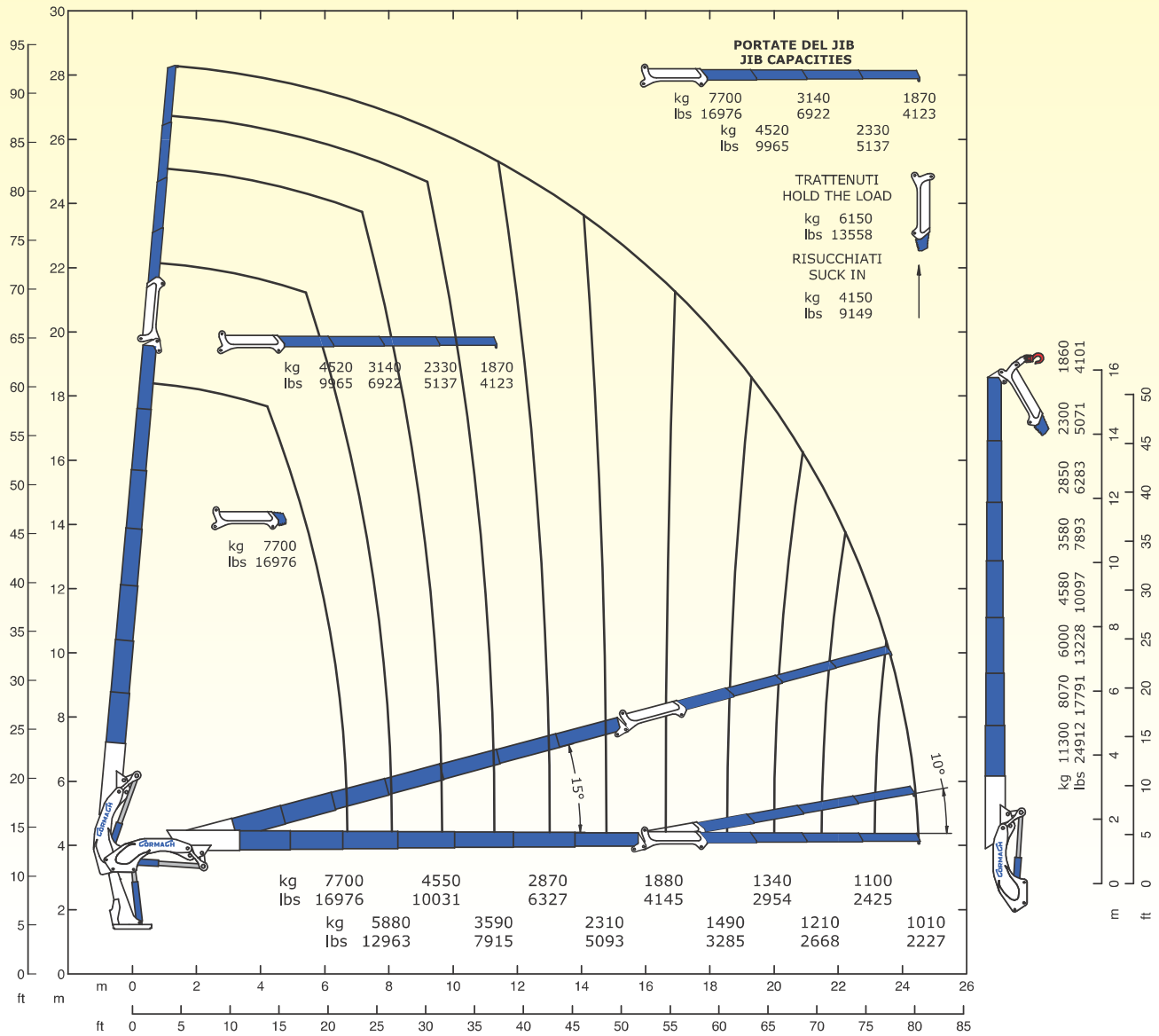

E7F184	E7F184	
71200 daN*m	515089 Lb*ft	Momento statico massimo al perno torretta – Max. static moment at the turret pin Moment statique max. a l'axe de la tourelle – Max. statisches ubmoment am kransaulenbolzen
24.73 m	81' 2"	Sbraccio idraulico – Hydraulic boom lenght Longueur du bras hydraulique – Hydraulic reichweite
		Sbraccio con prolunghe manuali – Boom length with manual extension Longueur du bras avec rallonges manuelles - Auslegerlänge
7100 daN*m	51364 Lb*ft	Coppia di rotazione – Slew torque – Moment de rotation – Drehmoment
90 sec 360°	90 sec 360°	Tempo di rotazione – Slewing speed – Temp de rotation – Schwenkgeschwindigkeit
3625+2875mm	11' 11"+9' 5"	Uscita stabilizzatori – Outriggers extension – Sortie de bequilles – Breite der Abstützung
8850 mm	29' 0"	Larghezza stabilizzatori – Outriggers width – Largeur des bequilles – Gesamtbreite der Abstützung
1645 mm	5' 5"	Lunghezza – Length – Longueur - Gesambreite
2550 mm	8' 4"	Larghezza – Width – Largeur - Breite
2940 mm	9' 8"	Altezza – Height – Hauteur - Höhe
8431 kg	18587 lbs	Peso (senza olio e montaggio) – Weight (without oil and fitting) Poids (sans huile et montage – Gewicht (ohne Öil und ohne)
100 l/min	26 us gal/min	Portata pompa – Pump delivery – Capacité de la pompe - Pumpenleistung
320 bar	4550 psi	Pressione (*) – Pressure (*) – Pression (*) - Druck (*)
235 l	62 us gal	Capacità serbatoio olio – Oil tank capacity – Capacité du rèservoire de l'huile – Öil tank inhalt

(*) Consigliata, (*) Recommended, (*) Recommandé, (*) Empfohlen.

STANDARD

OPTIONAL

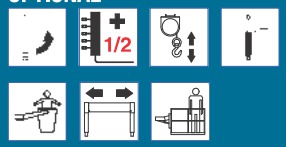
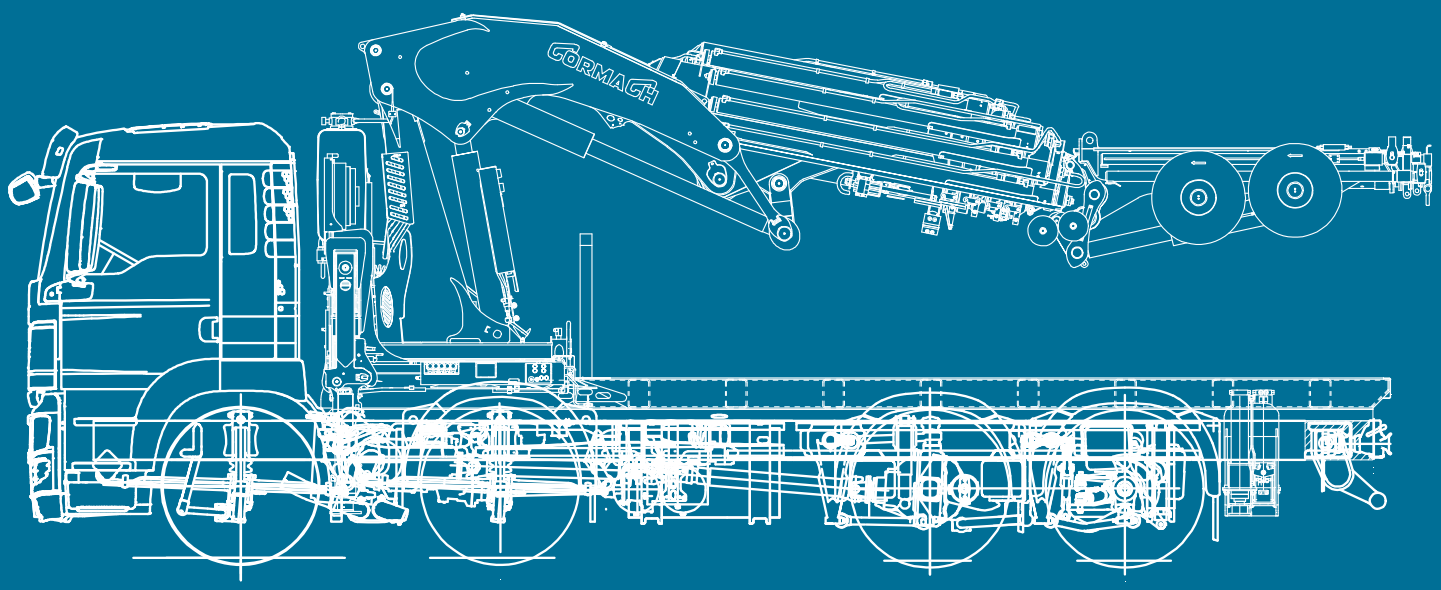
E7F182		E7F183		E7F184		E7F185		E7F186		E9F132		E9F133		E9F134	
m/ft	kg/lbs	m/ft	kg/lbs	m/ft	kg/lbs	m/ft	kg/lbs	m/ft	kg/lbs	m/ft	kg/lbs	m/ft	kg/lbs	m/ft	kg/lbs
6.43	8100	6.50	7910	6.60	7700	6.70	7370	6.80	7150	8.08	5720	8.15	5500	8.20	5330
21'1"	17857	21'4"	17439	21'8"	16976	22'0"	16248	22'4"	15763	26'7"	12610	26'7"	12125	26'9"	11751
7.90	6200	7.98	6040	8.06	5880	8.14	5740	8.19	5630	9.65	4560	9.71	4430	9.76	4330
25'11"	13669	26'3"	13316	26'6"	12963	26'9"	12655	26'10"	12412	31'8"	10053	31'10"	9766	32'0"	9546
9.47	4840	9.55	4700	9.63	4550	9.71	4430	9.76	4330	11.28	3580	11.35	3460	11.40	3370
31'1"	10670	31'4"	10362	31'8"	10031	31'11"	9766	32'0"	9546	37'0"	7893	37'2"	7628	37'4"	7430
11.10	3850	11.18	3720	11.26	3590	11.34	3470	11.39	3380	12.96	2840	13.03	2730	13.08	2640
36'5"	8488	36'9"	8201	37'0"	7915	37'3"	7650	37'4"	7452	42'6"	6261	42'9"	6019	42'11"	5820
12.79	3120	12.87	3000	12.95	2870	13.03	2760	13.08	2670	14.73	2280	14.80	2170	14.85	2080
42'0"	6878	42'3"	6614	42'6"	6327	42'9"	6085	42'11"	5886	48'4"	5027	48'6"	4784	48'8"	4586
14.56	2560	14.64	2430	14.72	2310	14.80	2210	14.85	2120	16.57	1850	16.64	1740	16.69	1650
47'9"	5644	48'1"	5357	48'4"	5093	48'7"	4872	48'9"	4674	54'4"	4079	54'6"	3836	54'8"	3638
16.40	2120	16.48	2000	16.56	1880	16.64	1780	16.69	1690	18.49	1460	18.56	1350	18.61	1270
53'10"	4674	54'1"	4409	54'4"	4145	54'7"	3924	54'9"	3726	60'8"	3219	60'11"	2976	61'1"	2800
18.32	1730	18.40	1610	18.48	1490	18.56	1400	18.61	1310	20.49	1170	20.56	1060	20.61	980
60'1"	3814	60'4"	3549	60'8"	3285	60'11"	3086	61'1"	2888	67'3"	2579	67'5"	2337	67'7"	2161
19.78	1570	19.86	1450	19.94	1340	20.02	1240	20.07	1150	22.55	950	22.62	840	22.67	760
64'11"	3461	65'2"	3197	65'5"	2954	65'8"	2734	65'10"	2535	74'0"	2095	74'3"	1852	74'5"	1676
21.27	1440	21.35	1320	21.43	1210	21.51	1110	21.56	1030	24.30	850	24.37	750	24.42	660
69'9"	3176	70'1"	2910	70'4"	2668	70'7"	2447	70'9"	2271	79'9"	1874	80'0"	1653	80'2"	1455
		23.00	1210	23.08	1100	23.16	1000	23.21	920	26.05	780	26.12	680	26.17	600
		75'6"	2668	75'9"	2425	76'0"	2205	76'2"	2028	85'6"	1720	85'8"	1499	85'10"	1323
				24.73	1010	24.81	920	24.86	830			28.04	620	28.09	540
				81'2"	2227	81'5"	2028	81'7"	1830			92'0"	1367	92'2"	1190
						26.57	850	26.62	760					30.00	500
						87'2"	1874	87'4"	1676					98'5"	1102
								28.35	710						
								93'0"	1565