F215A active - F215A e-active

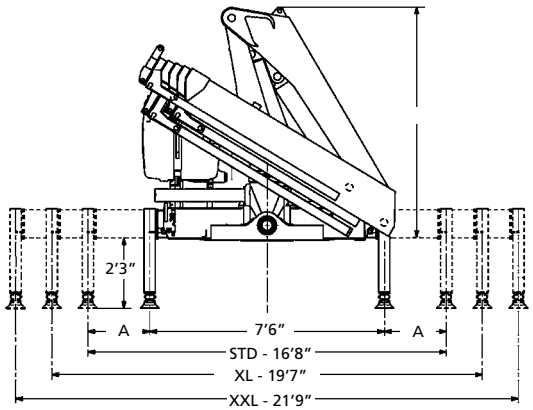

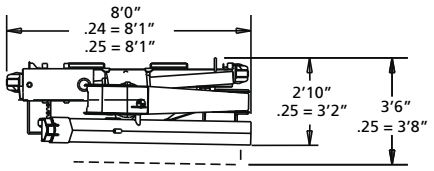

	STD	XL	XXL
A	6'4"	6'0"	7'1"

L SERIE

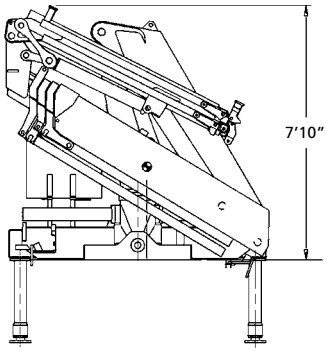

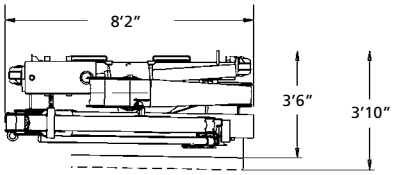

L212	1102 lbs
ML	97 lbs
NL	63 lbs
PL	46 lbs

L213	1278 lbs
NL	63 lbs
PL	46 lbs

L214	1432 lbs
PL	46 lbs

F215A active - F215A e-active

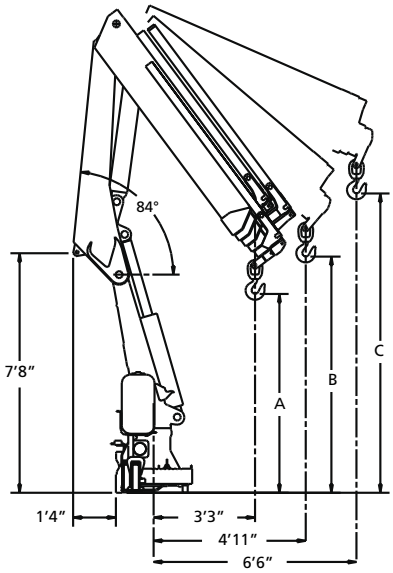

	A	B	C
F215A.0.21	7'7"	9'1"	12'4"
F215A.0.22	7'3"	8'8"	11'5"
F215A.0.23	7'0"	8'4"	10'9"
F215A.0.24	6'8"	7'11"	10'2"
F215A.0.25	6'5"	7'7"	9'8"

F215AC active - F215AC e-active

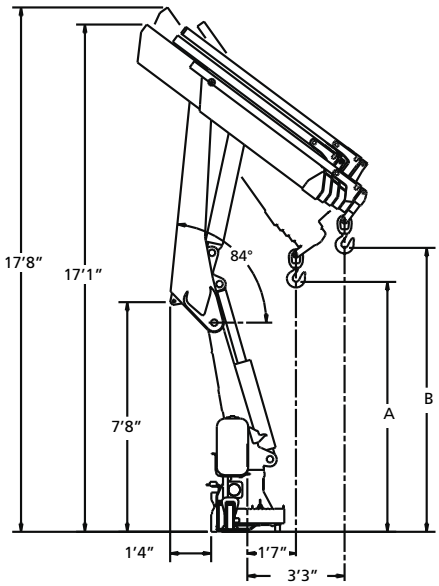

	A	B
F215AC.0.24	7'8"	9'11"