F175A dynamic - F175A e-dynamic

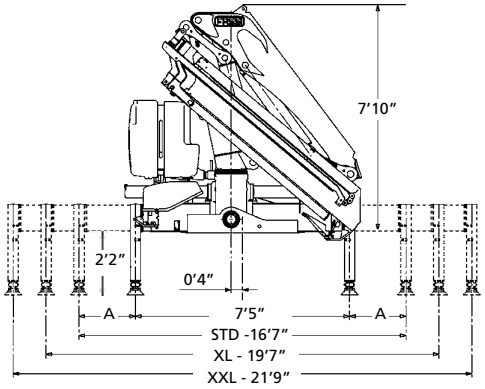

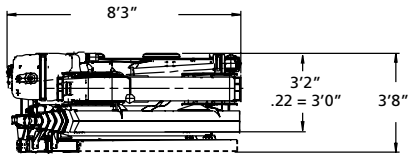

	STD	XL	XXL
A	4'6"	6'0"	7'1"

L SERIE

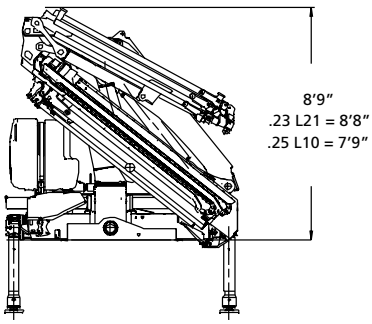

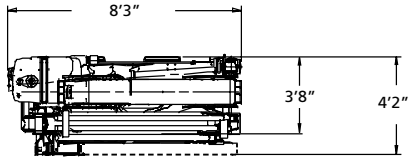

L102	705 lbs
ML	44 lbs

L152	881 lbs
ML	66 lbs
NL	52 lbs
PL	46 lbs

L153	1058 lbs
NL	52 lbs
PL	46 lbs

L154	1212 lbs
PL	46 lbs

F175A dynamic - F175A e-dynamic

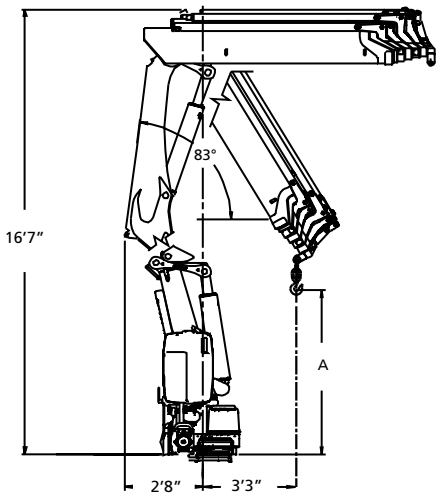

	A
F175A.2.22	7'3"
F175A.2.23	7'4"
F175A.2.24	7'0"
F175A.2.25	6'9"
F175A.2.26	6'5"

F175AC dynamic - F175AC e-dynamic

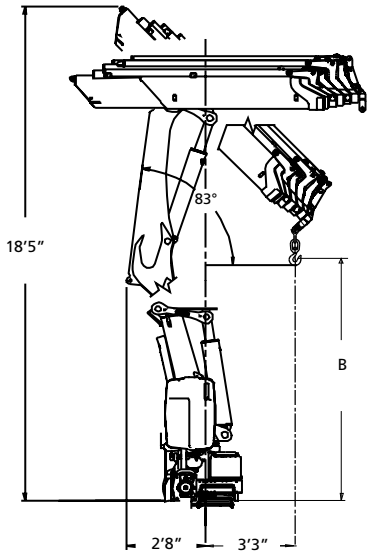

	B
F175AC.2.24	10'0"