F315A e-dynamic

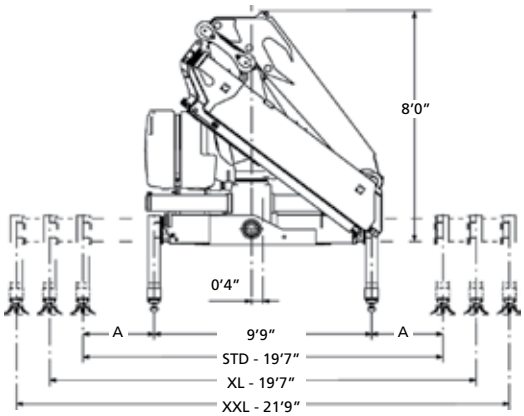

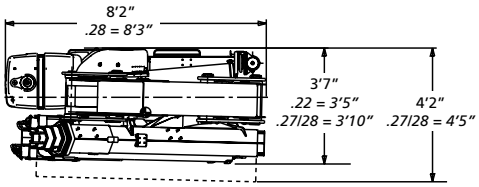

	STD	XL	XXL
A	4'6"	6'0"	7'1"

L SERIE

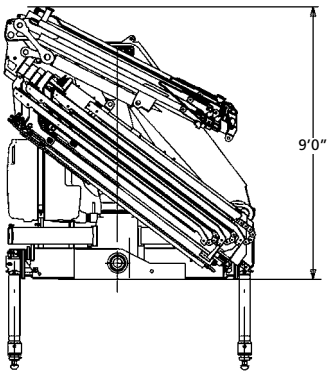

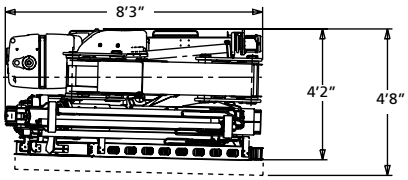

L212	1102 lbs	**L213**	1278 lbs	**L214**	1432 lbs	**L323**	3304 lbs	**L324**	3789 lbs
ML	97 lbs	**NL**	63 lbs	**PL**	46 lbs	**NL**	242 lbs	**NL**	242 lbs
NL	63 lbs	**PL**	46 lbs					**PL**	154 lbs
PL	46 lbs								

F315A e-dynamic

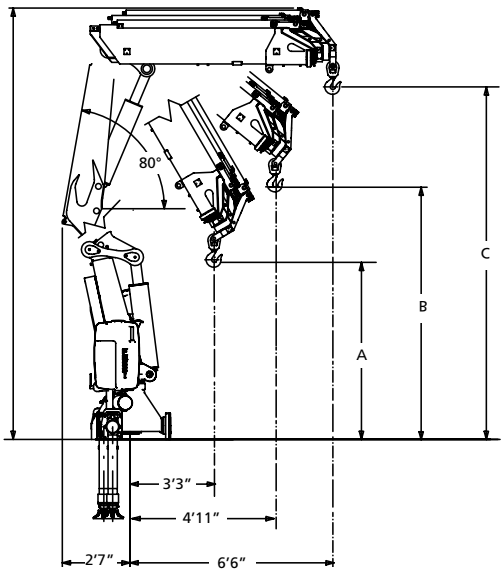

	A	B	C	D
F315A.2.2.22	7'5"	8'7"	10'9"	16'7"
F315A.2.2.23	7'2"	8'3"	10'2"	-
F315A.2.2.24	6'10"	7'11"	9'9"	16'9"
F315A.2.2.25	6'7"	7'7"	9'3"	16'11"
F315A.2.2.26	6'3"	7'3"	8'10"	17'0"
F315A.2.2.27	5'11"	6'10"	8'3"	-
F315A.2.2.28	5'10"	6'9"	8'3"5	-

F315AC e-dynamic

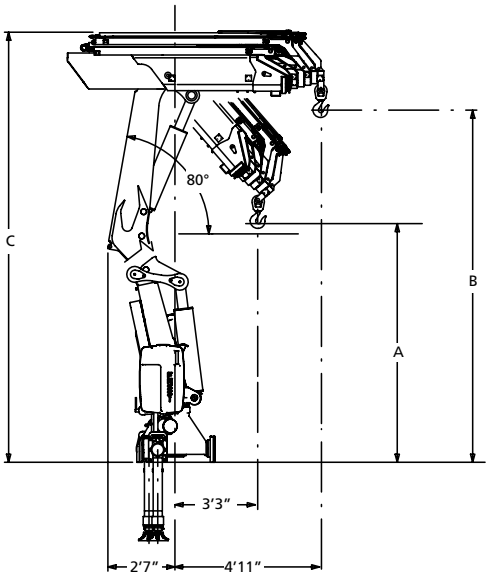

	A	B	C
F315AC.2.2.24	10'0"	12'4"	16'9"
F315AC.2.2.25	9'8"	11'8"	16'11"
F315AC.2.2.26	9'4"	11'2"	17'0"

F315RA e-dynamic

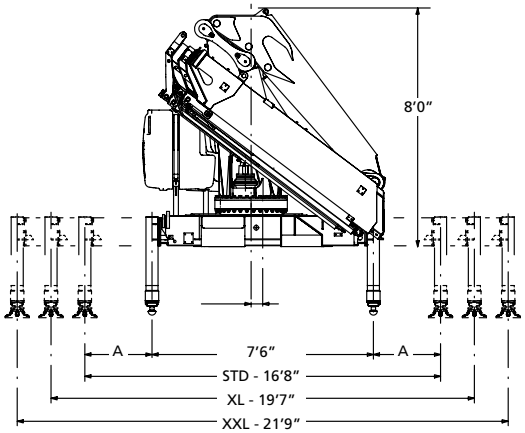

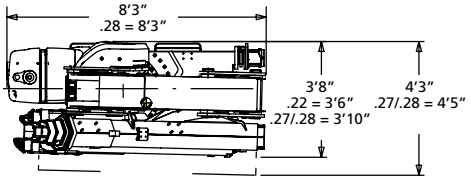

	STD	XL	XXL
A	4'6"	6'0"	7'1"

L SERIE

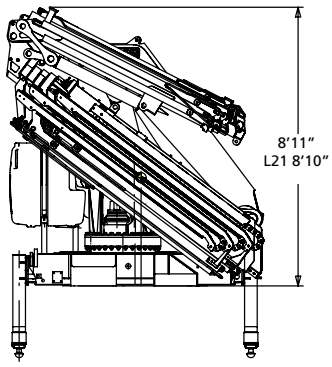

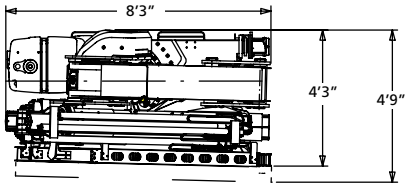

L213	1278 lbs	**L214**	1432 lbs	**L323**	3304 lbs	**L324**	3789 lbs
NL	63 lbs	**PL**	46 lbs	**NL**	242 lbs	**NL**	242 lbs
PL	46 lbs					**PL**	154 lbs

F315RA e-dynamic

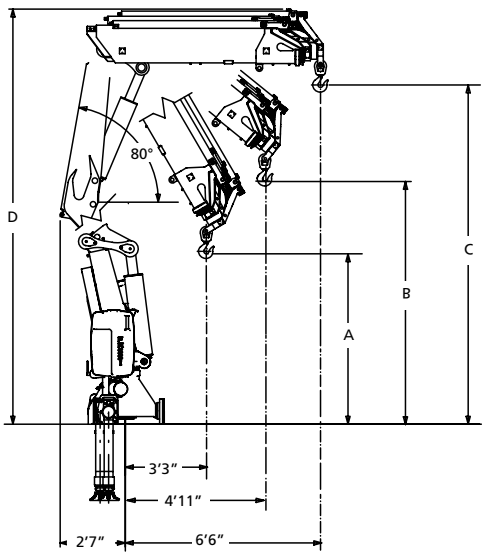

	A	B	C	D
F315RA.2.2.22	7'5"	8'7"	10'9"	16'7"
F315RA.2.2.23	7'2"	8'3"	10'2"	-
F315RA.2.2.24	6'10"	7'11"	9'9"	16'9"
F315RA.2.2.25	6'7"	7'7"	9'3"	16'11"
F315RA.2.2.26	6'3"	7'3"	8'10"	17'0"
F315RA.2.2.27	5'11"	6'10"	8'3"	-
F315RA.2.2.28	5'10"	6'9"	8'3"	-

F315RAC e-dynamic

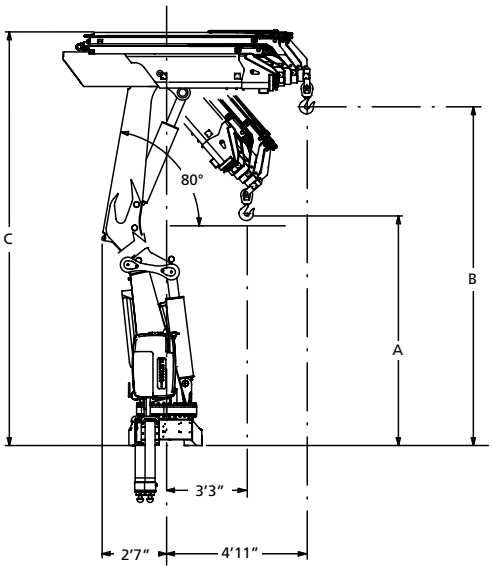

	A	B	C
F315RAC.2.2.24	10'0"	12'4"	16'9"
F315RAC.2.2.25	9'8"	11'8"	16'11"
F315RAC.2.2.26	9'4"	11'2"	17'0"