Working range

Main boom - metric 75%

Main boom

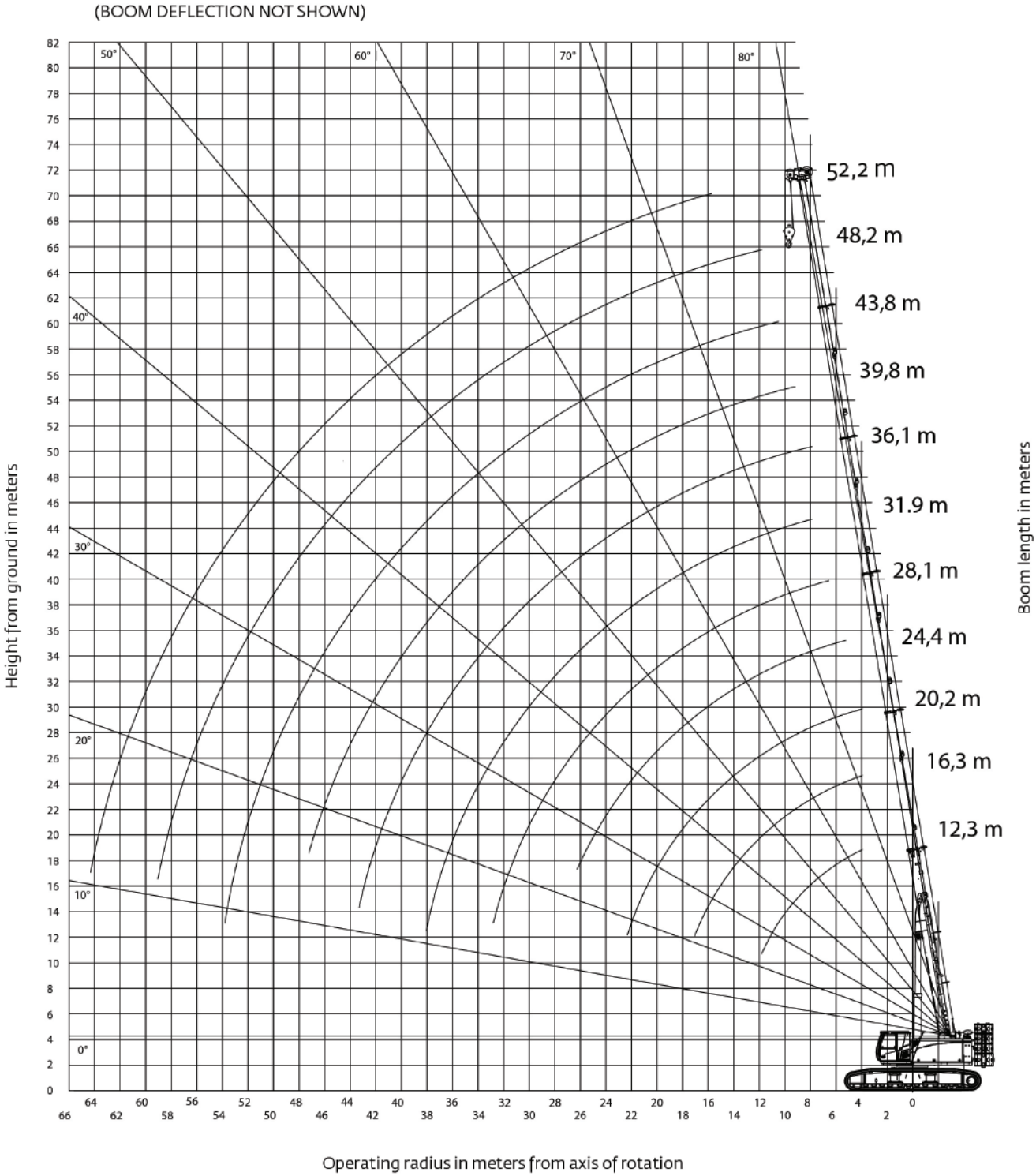

THIS CHART IS ONLY A GUIDE AND SHOULD NOT BE USED TO OPERATE THE CRANE.
The individual crane's load chart, operating instructions and other instructional plates must be read and understood prior to operating the crane.

Load chart

Main boom - metric 75%

52,2 m | 35,3 t | 100% | 360° | 0.3°

Kilograms

Radius [m]	Main boom length [m]										
	12,3	16,3	20	24	28	32	36	40	44	48,2	52,2
3	127 000*	80 000	75 000								
4	111 000*	76 000	68 000	66 000	42 000						
5	90 000	72 000	65 000	58 000	55 000						
6	74 000	68 000	60 000	56 000	49 000	46 000	35 000				
7	62 000	62 000	57 000	53 000	47 000	42 000	33 000	25 000			
8	53 000	54 000	52 300	48 000	46 000	40 000	31 000	24 000	19 100		
9	47 000	47 600	48 000	45 900	43 000	39 000	29 500	23 000	18 600	14 500	
10		42 200	42 600	42 400	40 000	37 000	28 000	21 000	18 400	14 400	
12		32 400	34 000	34 200	33 900	33 000	25 400	19 000	16 600	14 200	11 800
14		23 000	27 300	27 400	27 100	25 500	23 000	17 500	15 200	14 000	11 500
16			22 400	22 500	22 300	21 000	21 200	16 000	14 100	13 300	11 300
18				18 900	18 700	17 000	17 800	15 000	12 700	12 500	11 100
20				16 200	15 900	15 000	15 100	14 000	11 800	11 700	10 900
22					13 800	13 000	12 900	13 000	11 100	10 800	10 500
24					12 000	11 000	11 100	12 000	10 400	10 000	9 900
26						9 500	9 900	11 000	9 800	9 500	9 300
28						8 500	9 400	9 500	9 200	8 900	8 700
30							8 900	8 500	8 700	8 400	8 000
32							7 800	7 700	7 500	7 600	7 100
34								6 900	7 000	6 800	6 300
36								6 300	6 500	6 100	5 600
38									5 800	5 500	4 900
40									5 300	4 900	4 300
42										4 200	3 800
44										3 900	3 300
46											2 900
48											2 400

* Valid with special equipment

THIS CHART IS ONLY A GUIDE AND SHOULD NOT BE USED TO OPERATE THE CRANE.
The individual crane's load chart, operating instructions and other instructional plates must be read and understood prior to operating the crane.

Load chart

Main boom - metric 75%

52,2 m | 35,3 t | 100% | 360° | 1.5°

Kilograms

Radius [m]	Main boom length [m]										
	12,3	16	20	24	28	32	36	40	44	48	52,2
3	85 000	64 000	54 000								
4	80 000	64 000	57 000	50 000	42 000						
5	75 000	64 000	57 000	50 000	45 000						
6	70 000	64 000	57 000	50 000	45 000	35 000	30 500				
7	62 000	58 000	57 000	48 00	44 000	35 000	30 000	19 500			
8	53 000	54 000	52 300	47 400	43 000	35 000	29 000	19 000	15 300		
9	47 000	47 600	48 000	45 900	41 000	35 000	28 000	18 500	15 300	11 000	
10		42 200	42 600	42 400	39 000	34 000	27 000	18 300	15 300	11 000	
12		32 400	34 000	34 200	33 900	32 000	25 100	17 700	14 800	11 000	9 000
14		23 000	27 300	27 400	27 100	25 500	23 000	16 500	14 500	11 000	9 000
16			22 400	22 500	22 300	21 000	20 500	15 300	13 700	11 000	9 000
18				18 900	18 700	17 000	17 800	14 200	12 700	11 000	9 000
20				16 200	15 900	15 000	15 100	13 200	11 800	11 000	8 900
22					13 800	13 000	12 900	12 400	11 100	10 800	8 800
24					12 000	11 000	11 100	11 700	10 400	10 000	8 600
26						9 500	10 000	11 000	9 800	9 500	8 500
28						8 500	9 400	9 500	9 200	8 900	8 200
30							8 900	8 500	8 700	8 400	8 000
32							7 800	7 700	7 500	7 600	7 100
34							3 000	6 900	7 000	6 800	6 300
36								6 300	6 500	6 100	5 600
38									5 800	5 500	4 900
40									5 300	4 900	4 300
42										4 200	3 800
44										3 900	3 300
46											2 900
48											2 400

THIS CHART IS ONLY A GUIDE AND SHOULD NOT BE USED TO OPERATE THE CRANE.
The individual crane's load chart, operating instructions and other instructional plates must be read and understood prior to operating the crane.

Load chart

Auxiliary boom nose - metric 75%

52,2 m | With auxiliary boom nose | 35,3 t | 100% | 360˚ | 1.5˚

Kilograms

Radius [m]	Main boom length [m]										
	12,3	16,3	20,0	23,6	27,7	31,8	35,8	39,6	44,1	48,2	52,2
3	12 500	12 500	12 500								
4	12 500	12 500	12 500	12 500	12 500						
5	12 500	12 500	12 500	12 500	12 500	12 500					
6	12 500	12 500	12 500	12 500	12 500	12 500	12 500				
7	12 500	12 500	12 500	12 500	12 500	12 500	12 500	12 500			
8	12 500	12 500	12 500	12 500	12 500	12 500	12 500	12 500	12 500		
9	12 500	12 500	12 500	12 500	12 500	12 500	12 500	12 500	12 500	11 000	
10		12 500	12 500	12 500	12 500	12 500	12 500	12 500	12 500	11 000	
12		12 500	12 500	12 500	12 500	12 500	12 500	12 500	12 500	11 000	9 000
14		12 500	12 500	12 500	12 500	12 500	12 500	12 500	12 500	11 000	9 000
16			12 500	12 500	12 500	12 500	12 500	12 500	12 500	11 000	9 000
18			12 500	12 500	12 500	12 500	12 500	12 500	12 500	11 000	9 000
20				12 500	12 500	12 500	12 500	12 500	11 800	11 000	8 900
22				12 500	12 500	12 500	12 500	12 400	11 100	10 800	8 800
24					12 000	11 000	11 100	11 700	10 400	10 000	8 600
26						9 500	10 000	11 000	9 800	9 500	8 500
28						8 500	9 400	9 500	9 200	8 900	8 200
30							8 900	8 500	8 700	8 400	8 000
32							7 800	7 700	7 500	7 600	7 100
34							3 000	6 900	7 000	6 800	6 300
36								6 300	6 500	6 100	5 600
38									5 800	5 500	4 900
40									5 300	4 900	4 300
42										4 200	3 800
44										3 900	3 300
46											2 900
48											2 400

THIS CHART IS ONLY A GUIDE AND SHOULD NOT BE USED TO OPERATE THE CRANE.
The individual crane's load chart, operating instructions and other instructional plates must be read and understood prior to operating the crane.

Working range

Extensions - metric 75%

Main boom with extensions

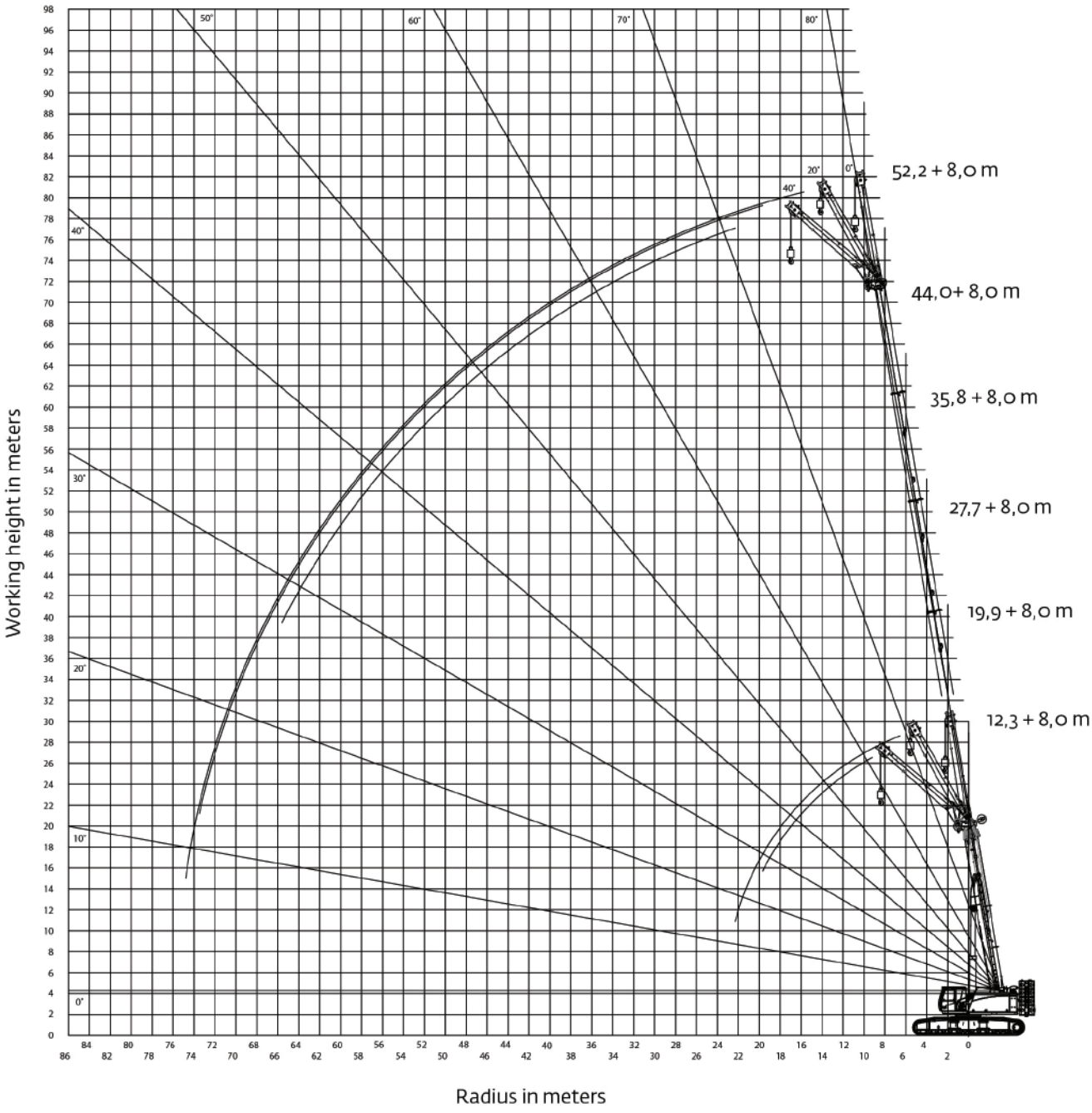

THIS CHART IS ONLY A GUIDE AND SHOULD NOT BE USED TO OPERATE THE CRANE.
The individual crane's load chart, operating instructions and other instructional plates must be read and understood prior to operating the crane.

Load chart

Extensions - metric 75%

52,2 m | 8 m | 35 t | 100% | 360˚ | 0.3˚

Kilograms

Radius [m]	Main boom length [m]																	
	12,3			19,9			27,7			35,8			44,0			52.2		
	0°	20°	40°	0°	20°	40°	0°	20°	40°	0°	20°	40°	0°	20°	40°	0°	20°	40°
5	14 200	10 300		14 900			14 000											
6	12 900	9 600		14 000	9 900		13 400											
7	11 900	9 000	7 200	13 000	9 500		12 800			11 400								
8	10 900	8 500	6 900	12 300	9 1	7 000	12 200	9 000		11 200								
9	10 200	8 000	6 700	11 600	8 700	6 900	11 700	8 800		10 900								
10	9 500	7 600	6 500	10 900	8 300	6 700	11 200	8 500	6 700	10 700	8 300		9 500					
12	8 200	6 900	6 100	9 900	7 700	6 400	10 300	8 000	6 500	10 000	7 900	6 400	9 200			6 500		
14	7 200	6 400	5 800	9 000	7 200	6 100	9 500	7 500	6 200	9 400	7 500	6 200	8 900	7 400	6 000	6 500		
16	6 400	6 100	5 700	8 200	6 700	5 900	8 900	7 100	6 000	8 900	7 200	6 000	8 600	7 100	5 900	6 500	6 700	
18		6 200		7 400	6 400	5 700	8 300	6 700	5 800	8 500	6 900	5 800	8 200	6 800	5 700	6 400	6 500	5 600
20				6 900	6 100	5 500	7 800	6 400	5 600	8 000	6 600	5 600	7 900	6 600	5 600	6 400	6 300	5 400
22				6 400	5 900	5 400	7 300	6 200	5 400	7 600	6 300	5 400	7 500	6 300	5 400	6 400	6 100	5 300
24				6 200	5 900		6 800	6 000	5 300	7 200	6 100	5 300	7 200	6 100	5 300	6 300	6 000	5 200
26							6 500	5 800	5 200	6 900	5 900	5 200	6 900	5 900	5 200	6 300	5 800	5 100
28							6 100	5 700	5 200	6 600	5 700	5 100	6 600	5 800	5 000	6 200	5 600	5 000
30							5 800	5 600		6 300	5 600	5 000	6 400	5 600	4 900	6 100	5 500	4 900
32							5 700	5 400		5 900	5 500	4 900	6 200	5 500	4 900	6 000	5 300	4 800
34										5 600	5 400	4 900	5 900	5 400	4 800	5 800	5 200	4 700
36										5 200	5 200		5 700	5 300	4 700	5 600	5 100	4 600
38										4 900	4 900		5 400	5 200	4 700	5 400	5 000	4 600
40										4 800	4 700		5 100	5 100	4 700	4 900	4 900	4 600
42													4 800	4 800	4 700	4 300	4 600	4 500
44													4 500	4 600		3 800	4 100	4 200
46													4 200	4 200		3 400	3 600	3 600
48													3 800	3 800		3 000	3 200	3 200
50													3 600			2 600	2 800	2 800
52																2 200	2 400	
54																2 000	2 000	
56																1 700	1 700	
58																1 600		

THIS CHART IS ONLY A GUIDE AND SHOULD NOT BE USED TO OPERATE THE CRANE.
The individual crane's load chart, operating instructions and other instructional plates must be read and understood prior to operating the crane.

Working range

Extensions - metric 75%

Main boom with extensions

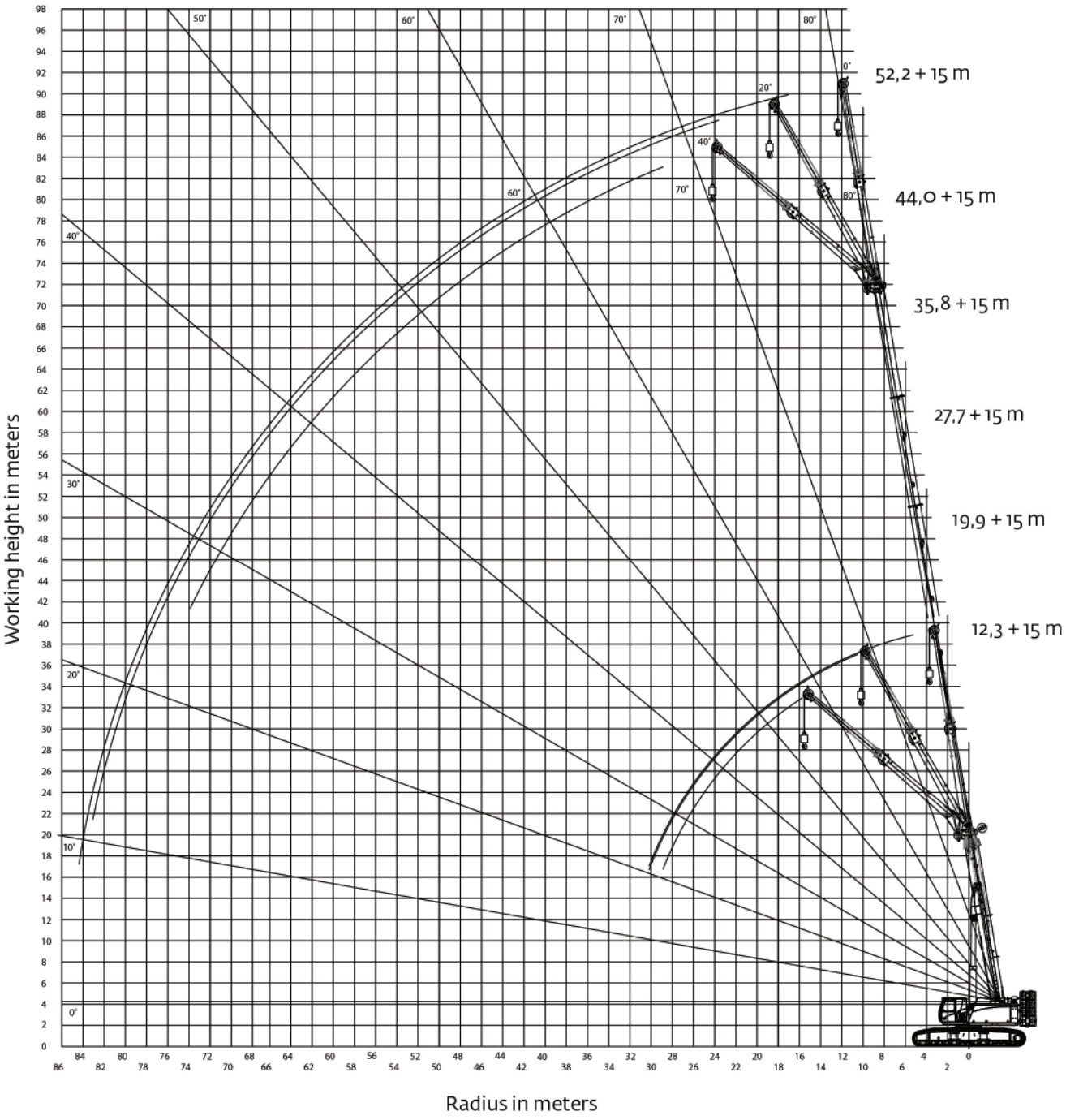

THIS CHART IS ONLY A GUIDE AND SHOULD NOT BE USED TO OPERATE THE CRANE.
The individual crane's load chart, operating instructions and other instructional plates must be read and understood prior to operating the crane.

Load chart

Extensions - metric 75%

52,2 m | 15 m | 35 t | 100% | 360° | 0.3°

Kilograms

Radius [m]	Main boom length [m]																	
	12,3			19,9			27,7			35,8			44,0			52.2		
	0°	20°	40°	0°	20°	40°	0°	20°	40°	0°	20°	40°	0°	20°	40°	0°	20°	40°
5	5 800																	
6	5 500			5 400														
7	5 200			5 300			4 900											
8	4 900	3 800		5 200			4 800											
9	4 600	3 700		5 000			4 700			4 400								
10	4 300	3 500		4 800			4 600			4 300			4 000					
12	3 800	3 200	2 600	4 400	3 400		4 500	3 400		4 200			3 900					
14	3 400	3 000	2 500	4 000	3 200		4 200	3 200		4 100	3 200		3 800			3 000		
16	3 100	2 800	2 400	3 700	3 000	2 500	3 900	3 000	2 500	3 900	3 100		3 700	3 100		3 000		
18	2 900	2 600	2 300	3 400	2 800	2 400	3 600	2 900	2 400	3 800	2 900	2 400	3 600	2 900		3 000	2 900	
20	2 700	2 500	2 200	3 100	2 700	2 400	3 400	2 700	2 400	3 600	2 800	2 400	3 500	2 800	2 400	3 000	2 800	
22	2 500	2 400	2 200	2 900	2 600	2 300	3 200	2 600	2 300	3 400	2 700	2 300	3 400	2 700	2 300	3 000	2 700	2 300
24	2 400	2 300		2 700	2 400	2 200	3 000	2 500	2 200	3 200	2 600	2 300	3 300	2 600	2 300	3 000	2 600	2 200
26				2 500	2 300	2 200	2 800	2 400	2 200	3 000	2 500	2 200	3 100	2 500	2 200	3 000	2 500	2 200
28				2 400	2 300	2 200	2 700	2 300	2 200	2 900	2 400	2 200	3 000	2 500	2 200	2 900	2 500	2 200
30				2 300	2 200	2 200	2 500	2 300	2 100	2 700	2 300	2 100	2 900	2 400	2 100	2 800	2 400	2 100
32				2 200	2 200		2 400	2 200	2 100	2 600	2 300	2 100	2 700	2 300	2 100	2 800	2 300	2 100
34							2 300	2 200	2 100	2 500	2 200	2 100	2 600	2 300	2 100	2 700	2 300	2 000
36							2 200	2 100		2 400	2 200	2 100	2 500	2 200	2 100	2 600	2 200	2 000
38							2 200	2 100		2 300	2 100	2 100	2 500	2 200	2 000	2 500	2 200	2 000
40										2 200	2 100	2 100	2 400	2 100	2 000	2 400	2 100	2 000
42										2 200	2 100		2 300	2 100	2 000	2 300	2 100	2 000
44										2 100	2 100		2 200	2 000	2 000	2 300	2 000	1 900
46										2 100	2 100		2 200	2 000	2 000	2 200	2 000	1 900
48													2 100	2 000	2 000	2 100	2 000	1 900
50													2 000	2 000		2 100	1 900	1 900
52													2 000	2 000		2 000	1 900	1 900
54													2 000	2 000		2 000	1 900	1 900
56																1 900	1 900	1 900
58																1 800	1 900	
60																1 600	1 600	
62																1 300	1 400	
64																1 100	1 300	

THIS CHART IS ONLY A GUIDE AND SHOULD NOT BE USED TO OPERATE THE CRANE.
The individual crane's load chart, operating instructions and other instructional plates must be read and understood prior to operating the crane.

Working range

Main boom - imperial 75%

Main boom

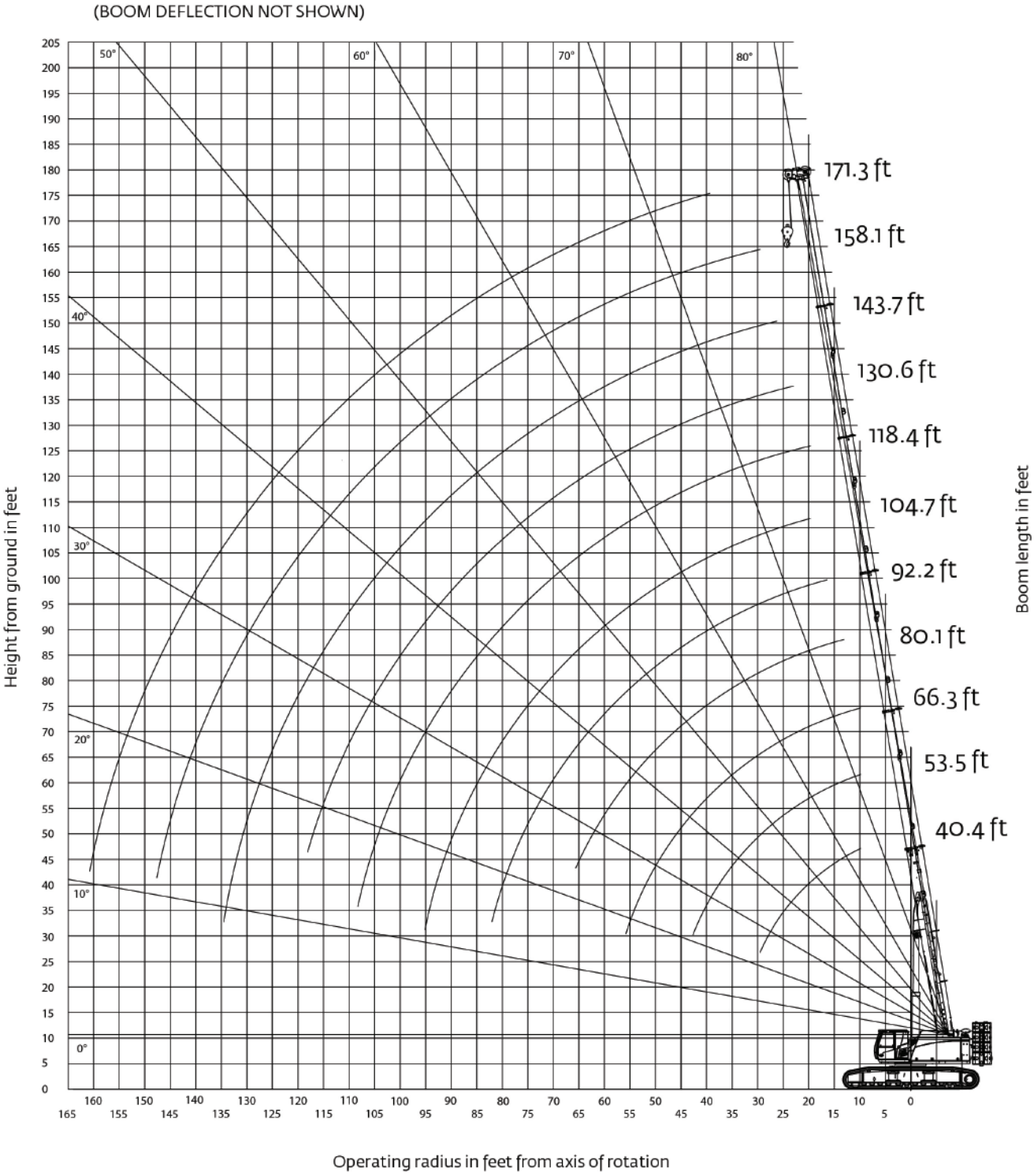

THIS CHART IS ONLY A GUIDE AND SHOULD NOT BE USED TO OPERATE THE CRANE.
The individual crane's load chart, operating instructions and other instructional plates must be read and understood prior to operating the crane.

Load chart

Main boom - imperial 75%

171.3 ft | 77,836 lb | 100% | 360° | 0.3°

Pounds

Radius [ft]	Main boom length [ft]										
	40.4	52.5	65.6	78.7	91.9	105.0	118.1	131.2	144.4	157.5	171.3
10	278,300*	175,900	164,600								
15	218,200*	162,500	146,100	135,400	109,000						
20	160,600	148,600	131,600	122,800	107,600	100,600	76,700				
25	124,400	125,800	119,300	110,000	102,300	89,900	70,000	53,700			
30		102,500	104,100	100,100	93,800	85,300	64,600	50,100	40,900	31,900	
35		85,100	87,600	87,500	83,700	78,600	59,800	44,800	39,200	31,600	
40		68,700	73,500	74,000	73,300	71,200	55,500	41,600	36,300	31,300	26,000
45		53,500	62,300	62,500	61,900	58,600	51,500	39,100	33,900	30,900	25,400
50			53,500	53,700	53,200	50,100	48,200	36,500	32,000	29,900	25,100
55				46,600	46,100	42,900	43,900	34,400	29,900	28,600	24,700
60				40,800	40,300	36,800	38,400	32,800	27,800	27,300	24,400
65				36,300	35,600	33,500	33,800	31,100	26,200	26,000	24,100
70					32,000	30,100	30,000	29,400	25,000	24,500	23,400
75					28,700	26,800	26,700	27,700	23,800	23,100	22,600
80						23,600	24,000	26,000	22,700	21,800	21,600
85						21,100	22,100	24,400	21,600	21,000	20,600
90						19,400	21,100	21,900	20,700	20,100	19,600
95							20,300	19,900	19,800	19,100	18,400
100							19,100	18,300	18,600	18,100	17,200
105								17,000	16,500	16,800	15,600
110								15,600	15,700	15,400	14,300
115								14,500	14,900	14,200	13,100
120									13,900	13,100	11,900
125									12,700	12,100	10,700
130									11,900	11,100	9,700
135										9,900	8,800
140										9,000	8,000
145											7,200
150											6,500
155											5,700

* Valid with special equipment

THIS CHART IS ONLY A GUIDE AND SHOULD NOT BE USED TO OPERATE THE CRANE.
The individual crane's load chart, operating instructions and other instructional plates must be read and understood prior to operating the crane.

Load chart

Main boom - imperial 75%

171.3 ft | 77,836 lb | 100% | 360˚ | 1.5˚

Pounds

Radius [ft]	Main boom length [ft]										
	40.4	52.5	65.6	78.7	91.9	105.0	118.1	131.2	144.4	157.5	171.3
10	186,900	141,100	119,400								
15	170,100	141,100	125,700	110,200	96,400						
20	152,600	139,800	125,700	109,800	99,000	77,200	67,100				
25	124,400	122,300	119,300	105,100	95,600	77,200	64,800	42,300			
30		102,500	104,100	100,100	89,800	76,800	61,400	40,700	33,700	24,300	
35		85,100	87,600	87,500	82,200	73,500	58,100	39,900	33,400	24,300	
40		68,700	73,500	74,000	73,300	69,200	54,900	38,800	32,600	24,300	19,800
45		53,500	62,300	62,500	61,900	58,300	51,400	36,800	32,100	24,300	19,800
50			53,500	53,700	53,200	50,100	47,300	34,700	30,900	24,300	19,800
55				46,600	46,100	42,900	42,900	32,800	29,400	24,300	19,800
60				40,800	40,300	36,800	38,400	31,000	27,800	24,300	19,800
65				36,300	35,600	33,500	33,800	29,300	26,200	24,300	19,600
70					32,000	30,100	30,000	27,900	25,000	24,000	19,500
75					28,700	26,800	26,700	26,700	23,800	23,100	19,200
80						23,600	24,000	25,500	22,700	21,800	18,900
85						21,100	22,100	24,300	21,600	21,000	18,700
90						19,400	21,100	21,900	20,700	20,100	18,300
95							20,300	19,900	19,800	19,100	17,900
100							19,100	18,300	18,600	18,100	17,200
105								17,000	16,500	16,800	15,600
110								15,600	15,700	15,400	14,300
115								14,500	14,900	14,200	13,100
120									13,900	13,100	11,900
125									12,700	12,100	10,700
130									11,900	11,100	9,700
135										9,900	8,800
140										9,000	8,000
145											7,200
150											6,500
155											5,700

* Valid with special equipment

THIS CHART IS ONLY A GUIDE AND SHOULD NOT BE USED TO OPERATE THE CRANE.
The individual crane's load chart, operating instructions and other instructional plates must be read and understood prior to operating the crane.

Load chart

Auxiliary boom nose - imperial 75%

171.3 ft | with auxiliary boom nose | 77,836 lb | 100% | 360˚ | 1.5˚

Pounds

Radius [ft]	Main boom length [m]										
	40.4	53.1	65.3	77.4	90.9	104.3	117.5	129.9	144.4	157.8	171.3
10	27,600	27,600	27,600								
15	27,600	27,600	27,600	27,600	27,600						
20	27,600	27,600	27,600	27,600	27,600	27,600	27,600				
25	27,600	27,600	27,600	27,600	27,600	27,600	27,600	27,600			
30		27,600	27,600	27,600	27,600	27,600	27,600	27,600	27,600	24,300	
35		27,600	27,600	27,600	27,600	27,600	27,600	27,600	27,600	,24,300	
40		27,600	27,600	27,600	27,600	27,600	27,600	27,600	27,600	24,300	19,800
45		27,600	27,600	27,600	27,600	27,600	27,600	27,600	27,600	24,300	19,800
50			27,600	27,600	27,600	27,600	27,600	27,600	27,600	24,300	19,800
55			27,600	27,600	27,600	27,600	27,600	27,600	27,600	24,300	19,800
60				27,600	27,600	27,600	27,600	27,600	27,400	24,300	19,800
65				27,600	27,600	27,600	27,600	27,600	26,300	24,300	19,600
70				27,600	27,600	27,600	27,600	27,500	24,800	24,100	19,400
75					28,600	26,600	26,600	26,600	23,800	22,700	19,200
80					25,800	23,400	23,900	25,500	22,700	21,900	18,900
85						21,000	22,100	24,300	21,600	21,000	18,700
90						19,400	21,100	21,600	20,700	20,100	18,200
95						17,700	20,300	19,900	19,800	19,200	17,900
100							19,000	18,200	18,900	18,300	17,200
105							17,200	17,000	16,500	16,800	15,600
110							6,600	15,500	15,500	15,400	14,300
115								14,200	15,000	14,100	,13,000
120								13,200	13,800	13,100	11,800
125									12,700	12,100	10,700
130									11,900	11,100	9,700
135										10,000	8,600
140										9,100	7,900
145										8,500	7,200
150											6,500
155											5,600
160											5,100

THIS CHART IS ONLY A GUIDE AND SHOULD NOT BE USED TO OPERATE THE CRANE.
The individual crane's load chart, operating instructions and other instructional plates must be read and understood prior to operating the crane.

Working range

Extensions - imperial 75%

Main boom with extensions

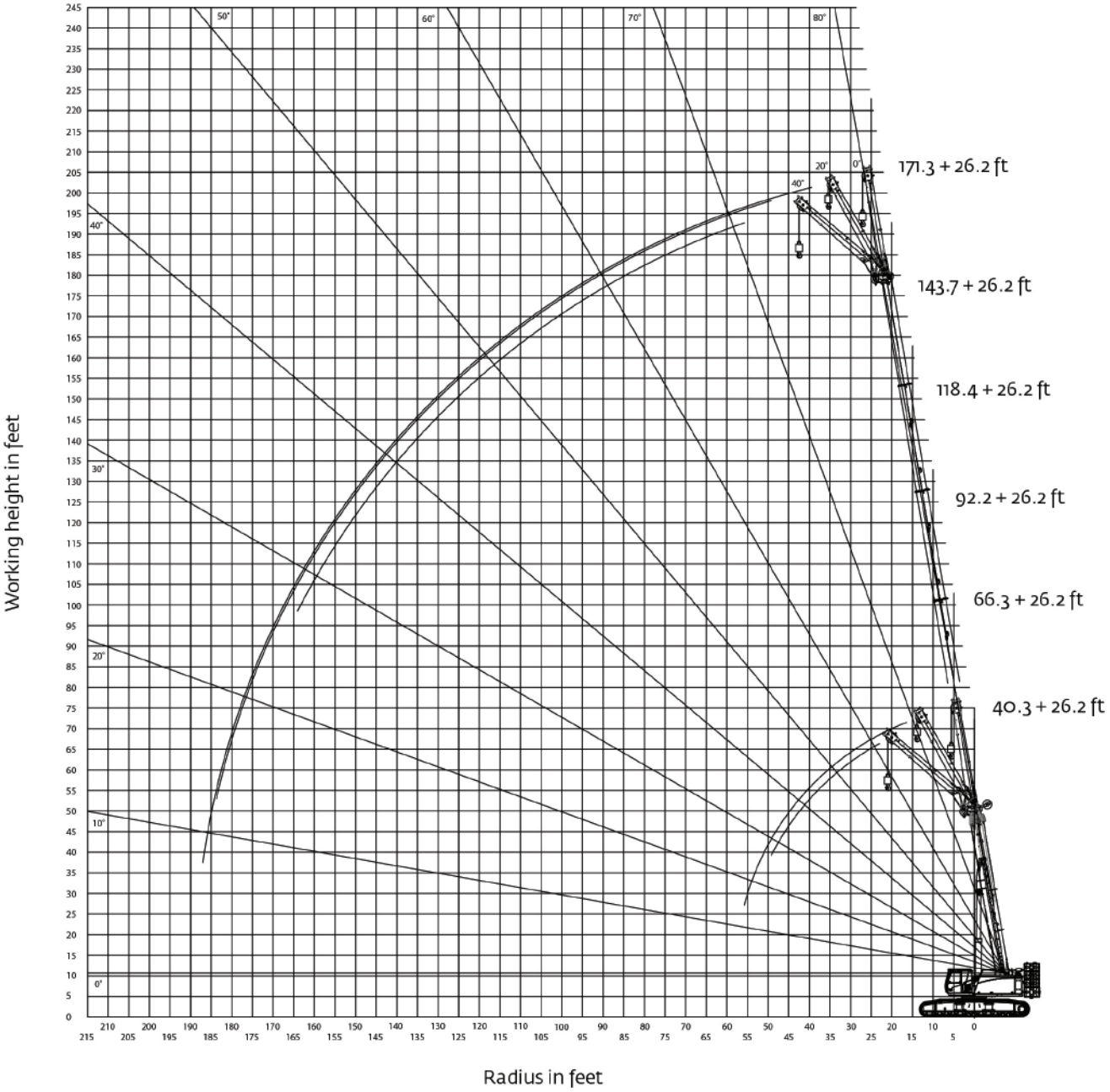

THIS CHART IS ONLY A GUIDE AND SHOULD NOT BE USED TO OPERATE THE CRANE.
The individual crane's load chart, operating instructions and other instructional plates must be read and understood prior to operating the crane.

Load chart

Extensions - imperial 75%

171.3 ft | 26.3 ft | 77,836 lb | 100% | 360˚ | 0.3˚

Pounds

Radius [ft]	Main boom length [ft]																	
	40.4			65.3			90.9			117.5			144.4			171.3		
	0°	20°	40°	0°	20°	40°	0°	20°	40°	0°	20°	40°	0°	20°	40°	0°	20°	40°
20	28,300	21,100		30,600	21,700		29,400											
25	24,900	19,200	15,500	27,700	20,300		27,400			24,900								
30	22,200	17,600	14,700	25,300	19,000	15,100	25,600	19,200		24,000								
35	19,900	16,300	14,000	23,300	17,900	14,600	24,000	18,300	14,600	23,000	18,000		20,800					
40	17,900	15,200	13,400	21,600	16,900	14,000	22,500	17,500	14,200	22,000	17,400	14,000	20,300			14,300		
45	16,200	14,400	12,900	20,100	16,000	13,600	21,300	16,700	13,700	21,000	16,700	13,700	19,800			14,300		
50	14,800	13,700		18,700	15,200	13,100	20,200	16,000	13,300	20,100	16,100	13,300	19,200	15,900	13,100	14,300		
55				17,400	14,600	12,800	19,100	15,300	13,000	19,300	15,600	13,000	18,600	15,400	12,800	14,200	14,700	
60				16,200	14,000	12,400	18,200	14,800	12,700	18,500	15,100	12,700	18,000	15,000	12,600	14,200	14,300	12,200
65				15,300	13,500	12,200	17,300	14,300	12,400	17,800	14,600	12,400	17,500	14,600	12,300	14,100	14,000	12,000
70				14,400	13,200		16,400	13,800	12,100	17,000	14,100	12,100	16,900	14,200	12,100	14,100	13,700	11,800
75					13,000		15,600	13,400	11,800	16,400	13,700	11,900	16,300	13,800	11,800	14,000	13,400	11,600
80							14,900	13,100	11,600	15,800	13,400	11,600	15,800	13,400	11,600	13,900	13,100	11,400
85							14,300	12,800	11,500	15,200	13,100	11,400	15,300	13,100	11,400	13,800	12,800	11,200
90							13,700	12,600		14,700	12,800	11,300	14,800	12,800	11,200	13,700	12,500	11,000
95							13,200	12,400		14,200	12,500	11,100	14,400	12,600	11,000	13,600	12,300	10,800
100								12,200		13,600	12,300	11,000	13,900	12,300	10,900	13,400	12,000	10,700
105										13,100	12,100	10,900	13,600	12,100	10,700	13,100	11,800	10,500
110										12,400	11,900	10,900	13,200	11,900	10,600	12,800	11,600	10,400
115										11,900	11,700		12,800	11,700	10,500	12,500	11,400	10,300
120										11,300	11,300		12,400	11,500	10,400	12,200	11,200	10,200
125											10,800		11,900	11,400	10,400	11,800	11,100	10,100
130											10,400		11,400	11,300	10,400	11,000	10,900	10,000
135													10,900	10,900	10,400	10,000	10,500	10,000
140													10,400	10,400		9,100	9,800	9,700
145													9,900	10,000		8,300	8,900	9,100
150													9,400	9,400		7,600	8,200	8,100
155													8,800	8,700		6,900	7,400	7,400
160																6,300	6,700	6,700
165																5,600	6,100	
170																4,900	5,500	
175																4,600	4,700	
180																4,100	4,100	

THIS CHART IS ONLY A GUIDE AND SHOULD NOT BE USED TO OPERATE THE CRANE.
The individual crane's load chart, operating instructions and other instructional plates must be read and understood prior to operating the crane.

Working range

Extensions - imperial 75%

Main boom with extensions

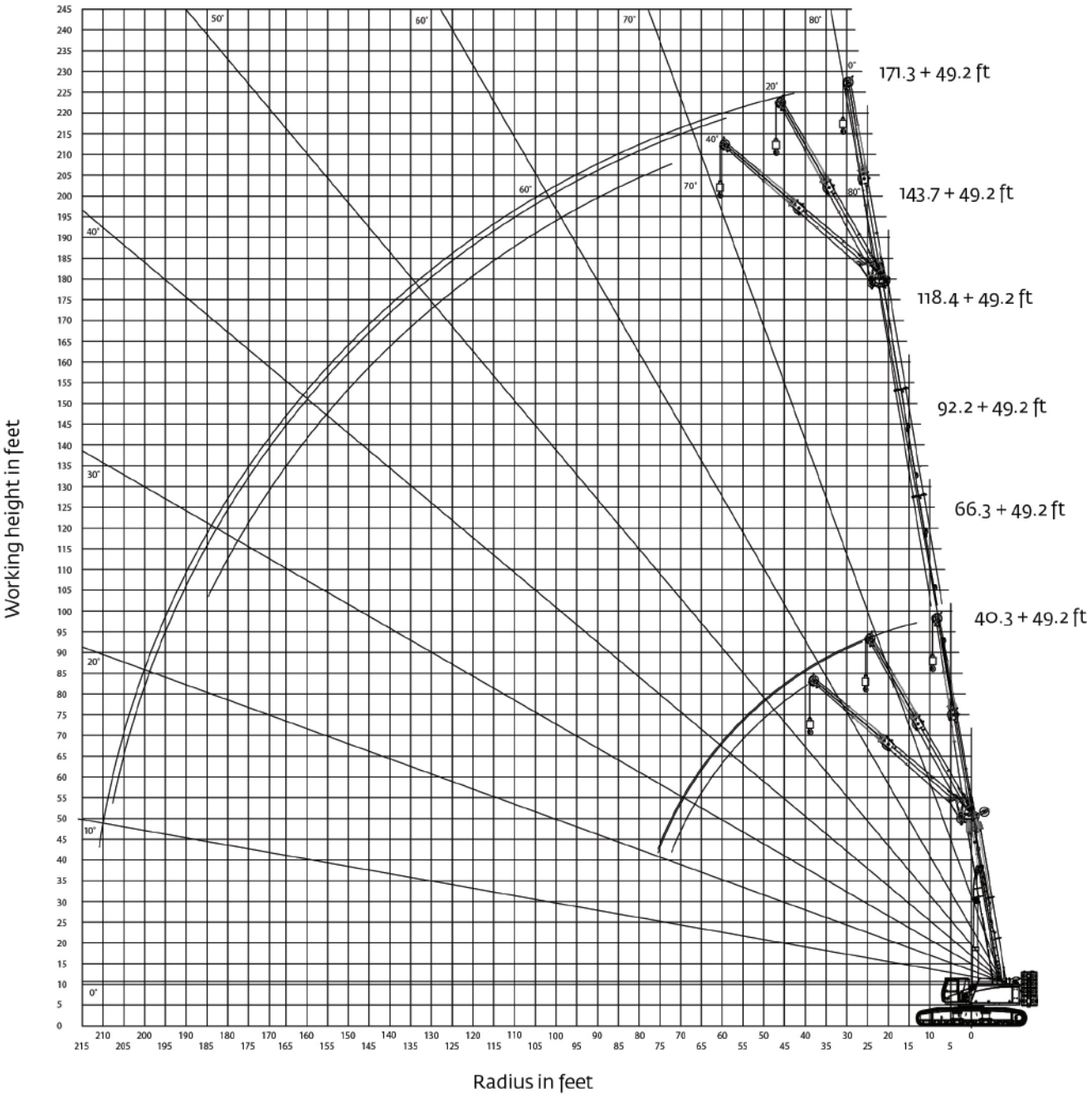

THIS CHART IS ONLY A GUIDE AND SHOULD NOT BE USED TO OPERATE THE CRANE.
The individual crane's load chart, operating instructions and other instructional plates must be read and understood prior to operating the crane.

Load chart

Extensions - imperial 75%

171.3 ft | 49.3 ft | 77,836 lb | 100% | 360˚ | 0.3˚

Pounds

Radius [ft]	Main boom length [ft]																	
	40.4			65.3			90.9			117.5			144.4			171.3		
	0°	20°	40°	0°	20°	40°	0°	20°	40°	0°	20°	40°	0°	20°	40°	0°	20°	40°
20	12,100			11,900														
25	11,000			11,500			10,700											
30	10,000	8,000		11,000			10,400			9,700								
35	9,100	7,500		10,400			10,100			9,500			8,700					
40	8,300	7,000	5,700	9,700	7,500		9,800	7,400		9,300			8,700					
45	7,700	6,600	5,500	9,000	7,100		9,300	7,100		9,000			8,500					
50	7,200	6,300	5,300	8,400	6,800		8,800	6,800		8,800	6,900		8,300			6,600		
55	6,700	5,900	5,200	7,800	6,500	5,500	8,300	6,500	5,500	8,500	6,600		8,200	6,600		6,600		
60	6,300	5,700	5,000	7,400	6,200	5,400	7,900	6,300	5,300	8,200	6,400	5,400	8,000	6,400		6,600	6,300	
65	5,900	5,500	4,900	6,900	5,900	5,200	7,500	6,100	5,200	7,900	6,200	5,200	7,800	6,200		6,600	6,200	
70	5,600	5,300	4,900	6,600	5,700	5,100	7,100	5,900	5,100	7,500	6,000	5,100	7,600	6,100	5,100	6,600	6,000	
75				6,200	5,500	5,000	6,800	5,700	5,000	7,200	5,800	5,000	7,400	5,900	5,000	6,600	5,900	5,000
80				5,900	5,300	4,900	6,500	5,500	4,900	6,900	5,700	5,000	7,200	5,800	5,000	6,600	5,700	4,900
85				5,600	5,200	4,900	6,200	5,400	4,900	6,700	5,500	4,900	6,900	5,600	4,900	6,600	5,600	4,800
90				5,400	5,100	4,900	6,000	5,200	4,800	6,400	5,400	4,800	6,700	5,500	4,800	6,500	5,500	4,800
95				5,200	5,000		5,700	5,100	4,800	6,200	5,300	4,800	6,500	5,400	4,800	6,300	5,300	4,700
100					4,900		5,500	5,000	4,700	6,000	5,100	4,700	6,300	5,200	4,700	6,200	5,200	4,600
105							5,400	4,900	4,600	5,800	5,000	4,700	6,100	5,100	4,600	6,100	5,100	4,600
110							5,200	4,800	4,600	5,600	4,900	4,600	5,900	5,000	4,600	5,900	5,000	4,500
115							5,000	4,700		5,400	4,800	4,600	5,700	4,900	4,500	5,800	4,900	4,500
120								4,700		5,300	4,800	4,600	5,500	4,800	4,500	5,600	4,800	4,400
125										5,100	4,700	4,600	5,400	4,800	4,500	5,500	4,800	4,400
130										5,000	4,600	4,600	5,300	4,700	4,500	5,400	4,700	4,400
135										4,900	4,600		5,100	4,600	4,400	5,200	4,600	4,300
140										4,800	4,600		5,000	4,600	4,400	5,100	4,500	4,300
145										4,700	4,500		4,900	4,500	4,400	5,000	4,500	4,200
150										4,600	4,600		4,800	4,400	4,500	4,900	4,400	4,200
155													4,700	4,400	4,500	4,800	4,400	4,200
160													4,600	4,400		4,700	4,300	4,200
165													4,500	4,400		4,600	4,200	4,200
170													4,400	4,400		4,500	4,200	4,200
175													4,400	4,400		4,400	4,200	4,200
180																4,300	4,200	4,200
185																4,200	4,200	
190																4,000	4,200	
195																3,700	3,700	
200																3,200	3,300	
205	15365x / (+) / EM3															2,800		

THIS CHART IS ONLY A GUIDE AND SHOULD NOT BE USED TO OPERATE THE CRANE.
The individual crane's load chart, operating instructions and other instructional plates must be read and understood prior to operating the crane.