HIAB eX.142 HIPRO

BASIC DATA

Technical data	eX.142 HIPRO BS-2	eX.142 HIPRO BSS-2	eX.142 HIPRO B-3	eX.142 HIPRO E-5
Mdyn (kNm)	159	159	159	159
Max. lifting capacity (kNm)	134	134	129	116.7
Lifting capacity (tm)	13.7	13.7	13.2	11.9
Outreach – lifting capacity, standard (m–kg)	3.1 - 3900	2.6 - 3900	3.6 - 3650	3.1 - 3900
	4.5 - 3000	4.5 - 3050	4.9 - 2650	4.9 - 2420
	6.3 - 2140	6.0 - 2260	6.7 - 1880	6.7 - 1660
	8.3 - 1620	7.6 - 1780	8.6 - 1420	8.6 - 1200
	–	–	10.7 - 1140	10.7 - 910
	–	–	–	12.8 - 730
	–	–	–	15.0 - 610
Outreach – lifting capacity, manual extensions (m – kg)	10.4 – 1220	–	12.9 – 890	17.2 – 490
Hydraulic outreach, standard (m)	8.5	7.9	11.0	15.1
Outreach, manual extensions (m)	10.7	–	13.2	17,4
Lifting height above installation level, hydr/man (m)	10.9 / 13.1	10.3	13.4 / 15.6	17.5 / 19.8
Rec. fixed oil flow (l/min)	70			
Rec. variable oil flow (l/min)	90 – 120			
Working pressure (Mpa)	33.3			
Tank capacity (l)	85 / 150			
Slewing angle (°)	415			
Max slope viable at full capacity (°)	5.9			
Slewing torque, gross (kNm)	20.5			
Slewing speed (°/s)	17			
Lifting speed at standard hydraulic outreach (m/s)	1.8	1.7	2.4	3.3
Height in folded position (mm)	2264			
Width in folded position (mm)	2452	2476		2490
Install space required with hose and pipe kit (mm)	839		942	931
Crane in standard version without stabiliser system (kg)	1510	1480	1640	2030
Frame attachments (kg)	26			
Stabiliser system equipment (kg)	216 – 383			

This table shows a few examples of models, and represents some of all options available. With the opportunity to configure your crane, we can provide you with a crane perfectly tailored to your needs.

Please contact your local dealer for more information on the variety of options we can offer.
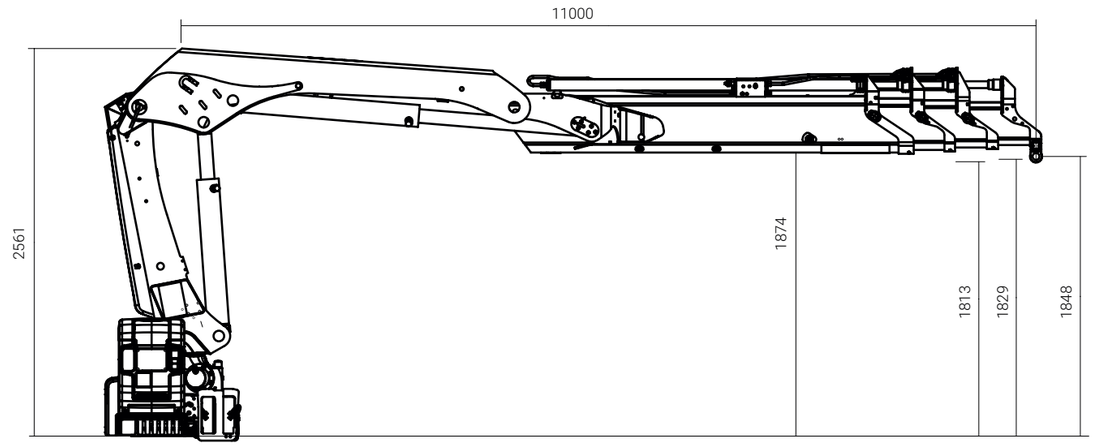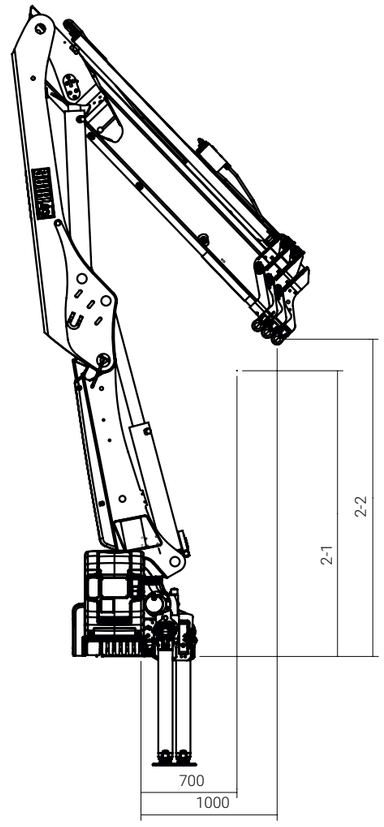
HIAB eX.142 HIPRO B-3*