3.2/23 Lifting Height at Column

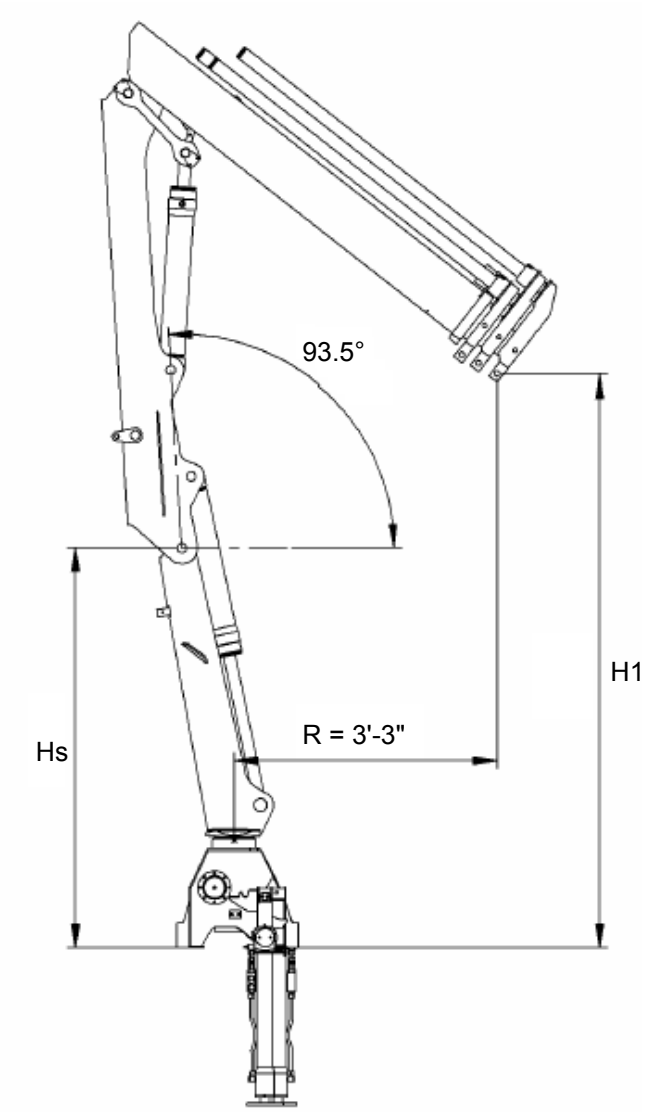

	Hs	H1
S 3.2/23 K1	5'-0" (1.53 m)	8'-1/2" (2.45 m)
S 3.2/23 K2	5'-0" 1.53 m	7'-7" (2.32 m)
S 3.2/23 K3	5'-0" 1.53 m	7'-2" (2.18 m)

3.2/23 Centers of Gravity

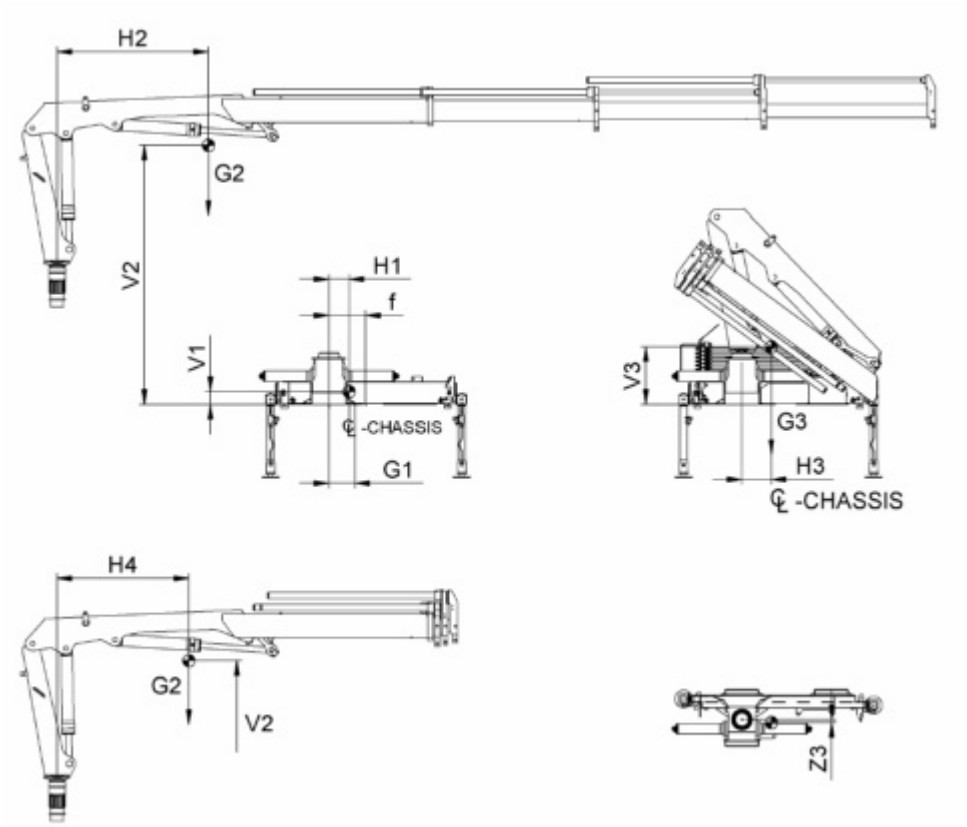

Model	V1	V2	V3	H1	H2	H3	H4	Z3	f	G1	G2	G3
3.2/23 K1	4.1" (105 mm)	4'-7" (1400 mm)	18.5" (470 mm)	6.5" (165 mm)	4'-1/2" (1235 mm)	10" (255 mm)	3'-6" (1075 mm)	-0.20" (-5 mm)	11.8" (300 mm)	8.4" (214 mm)	11.25" (286 mm)	19.3" (490 mm)
3.2/23 K2	4.1" (105 mm)	4'-9" (1445 mm)	19" (485 mm)	6.5" (165 mm)	5'-6" (1670 mm)	9.8" (250 mm)	4'-1" (1250 mm)	0.40" (10 mm)	11.8" (300 mm)	8.4" (214 mm)	12.8" (326 mm)	21.3" (540 mm)
3.2/23 K3	4.1" (105 mm)	4'-10" (1480 mm)	19.7" (500 mm)	6.5" (165 mm)	7'-1" (2170 mm)	9.4" (240 mm)	4'-7" (1390 mm)	1" (25 mm)	11.8" (300 mm)	8.4" (214 mm)	14.4" (366 mm)	22.8" (580 mm)