40 / 275 - Dimension Sketch - K2-K6

Dimensions in ft-in (mm).

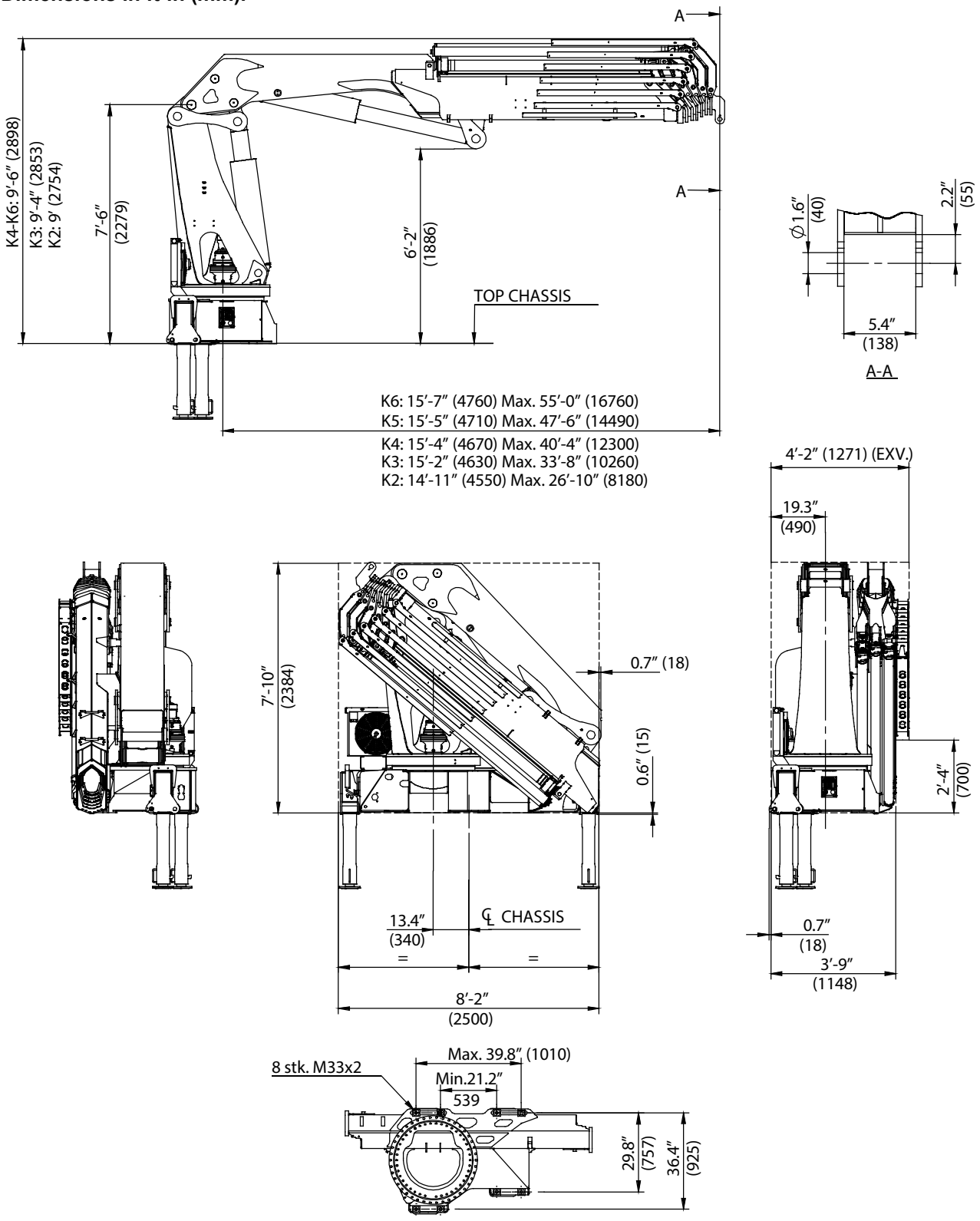

40 / 275 - Dimension Sketch K4-K6

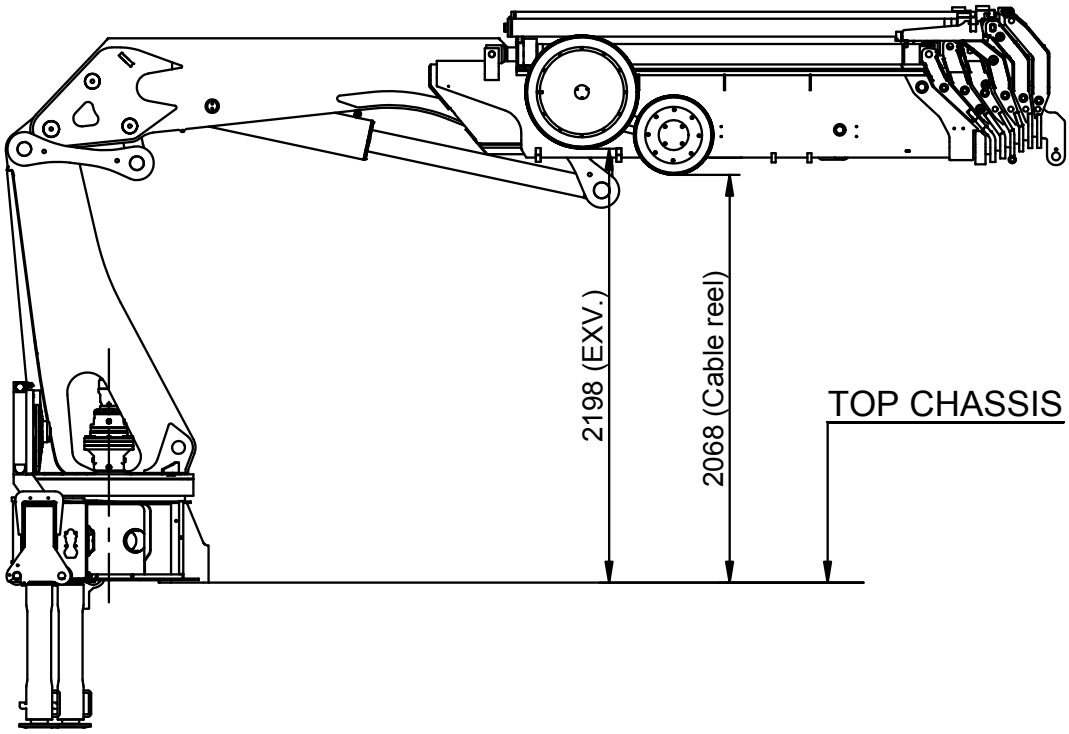

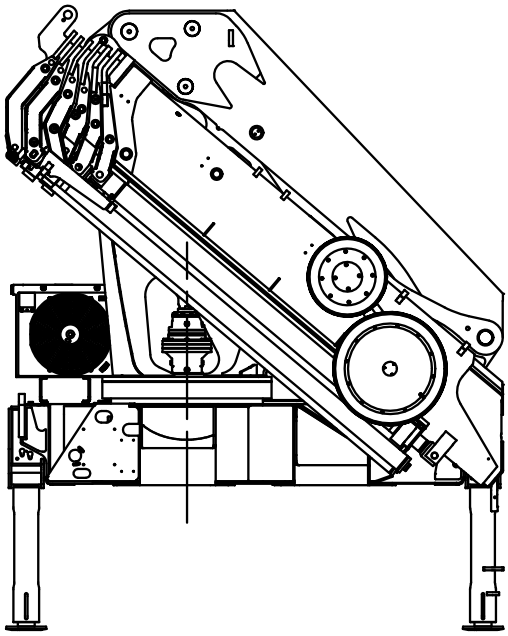

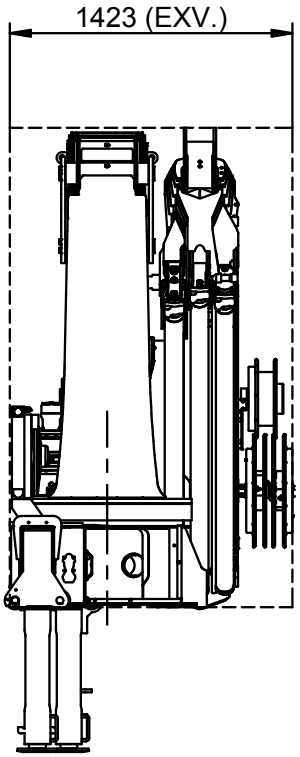

40 / 275 - Dimension Sketch K7-K8

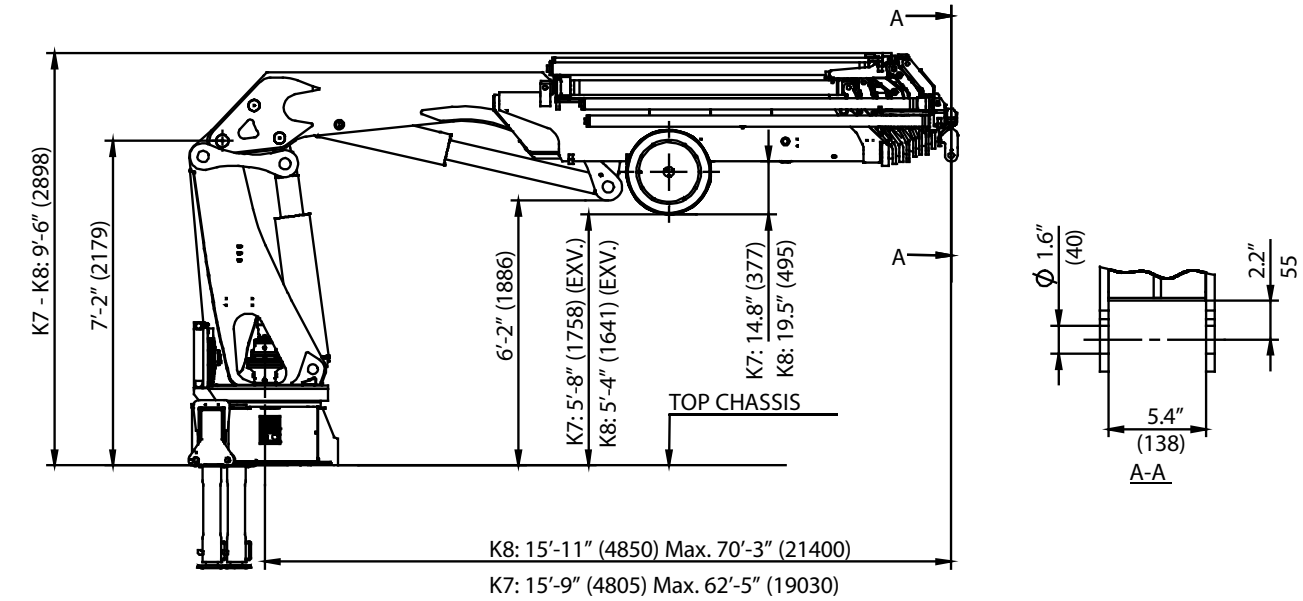

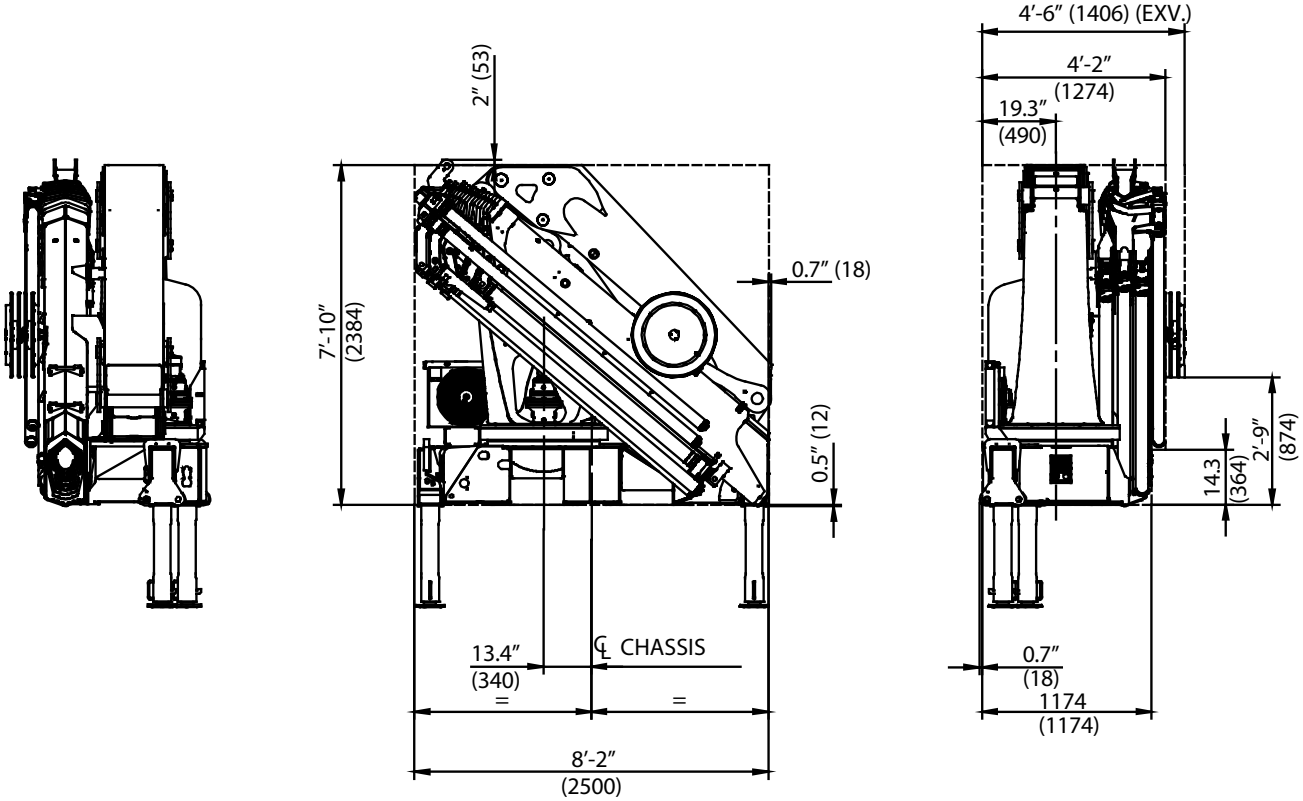

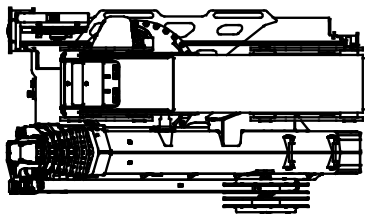

40 / 275 - K5 with FJ1000 Dimensional Drawing

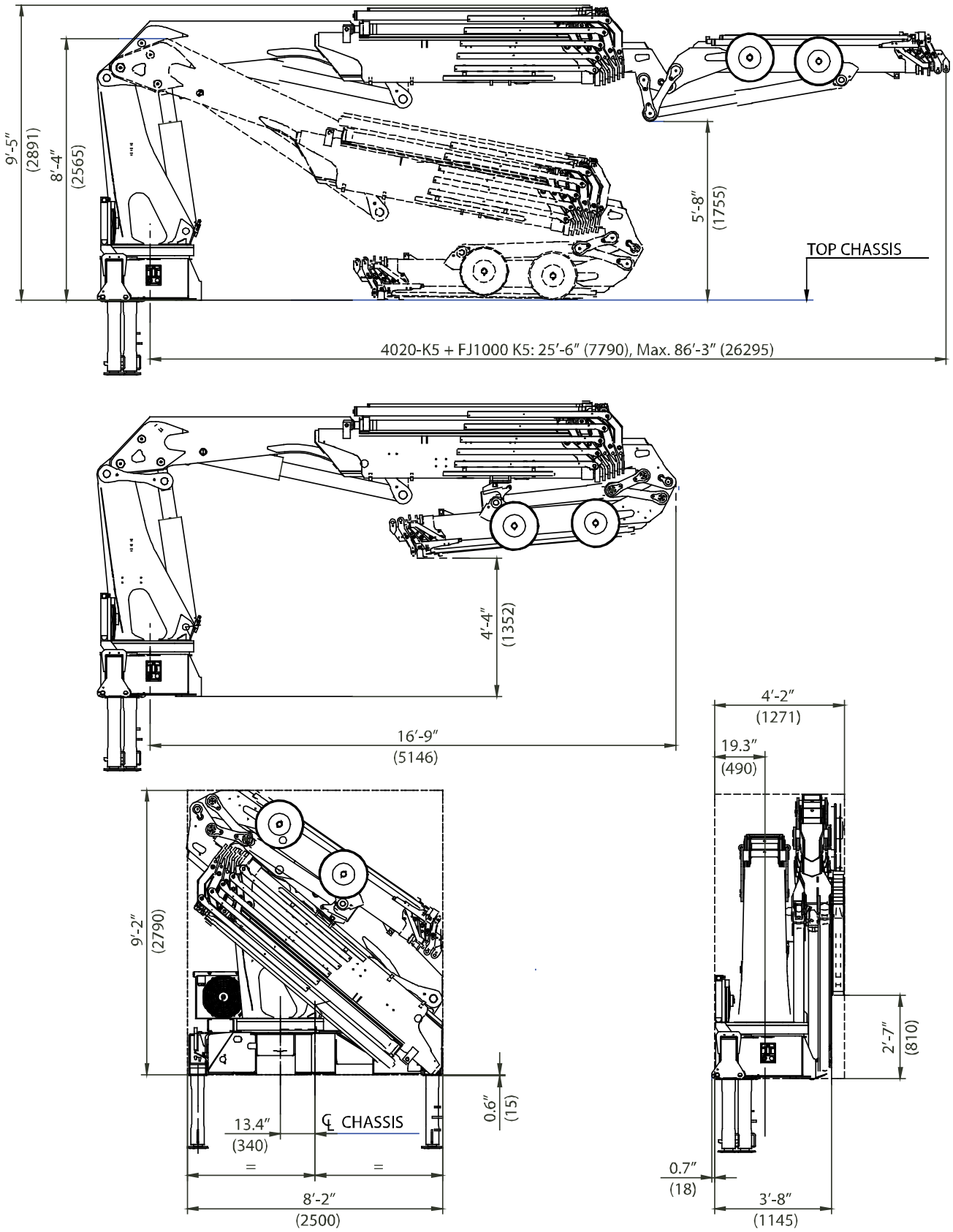

40 / 275 - K5 with FJ1000 with Winch Dimensional Drawing

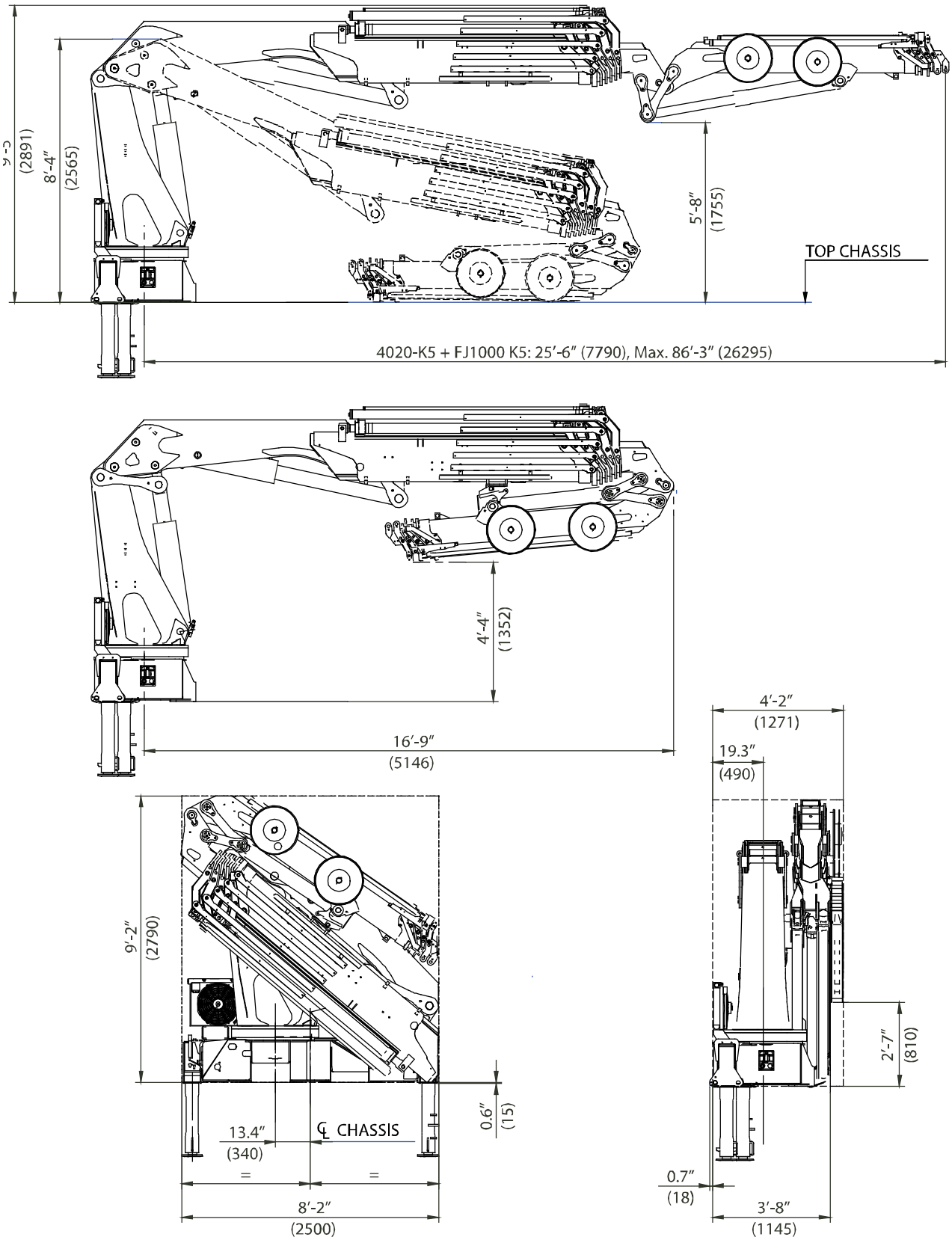

40 / 275 - K6 with FJ600 Dimensional Drawings

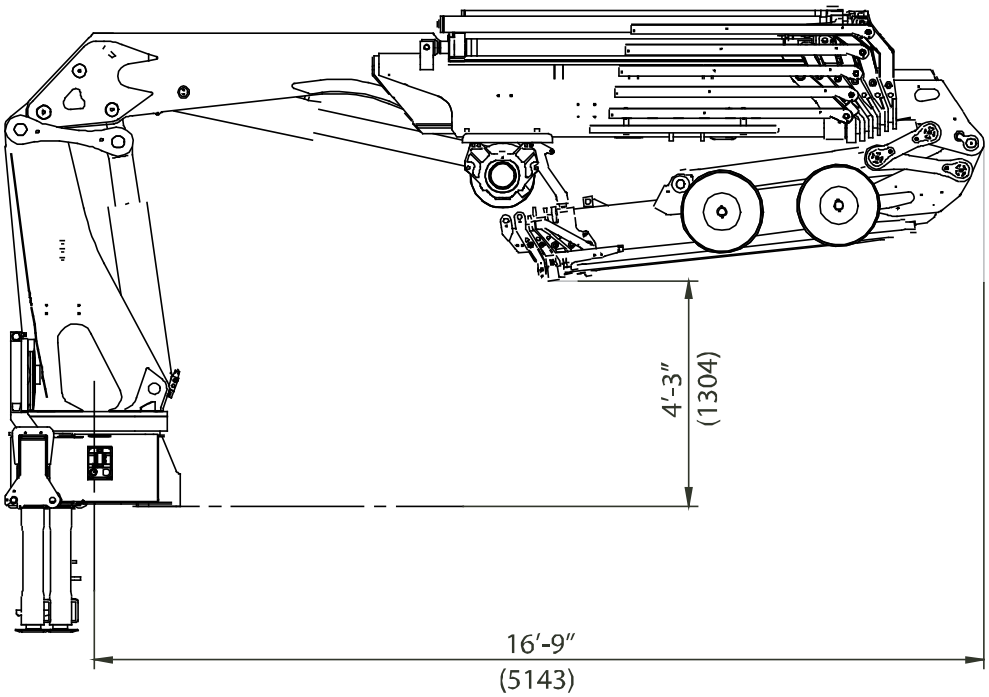

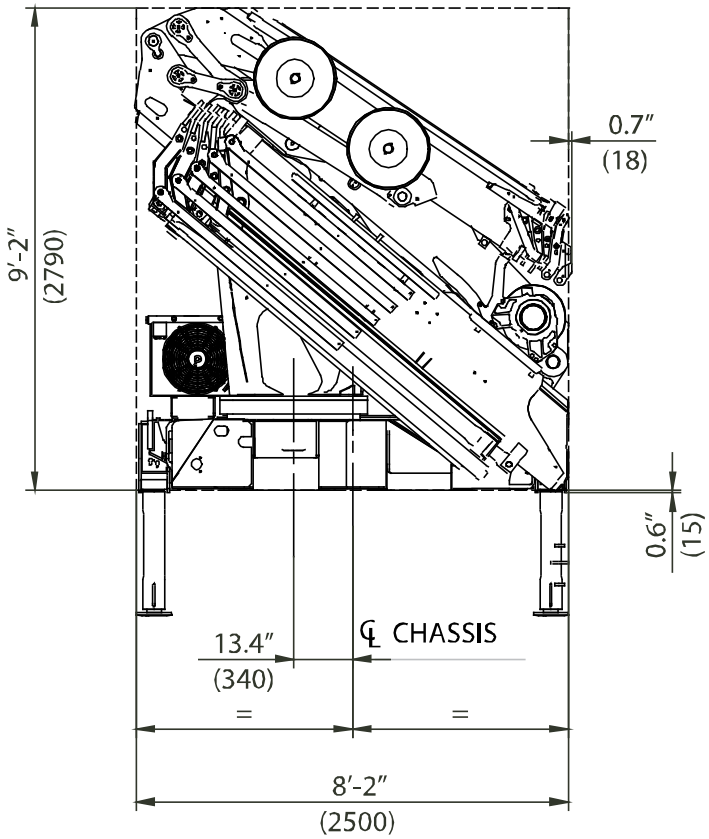

40 / 275 - K6 FJ600 with Winch Dimensionl Drawing

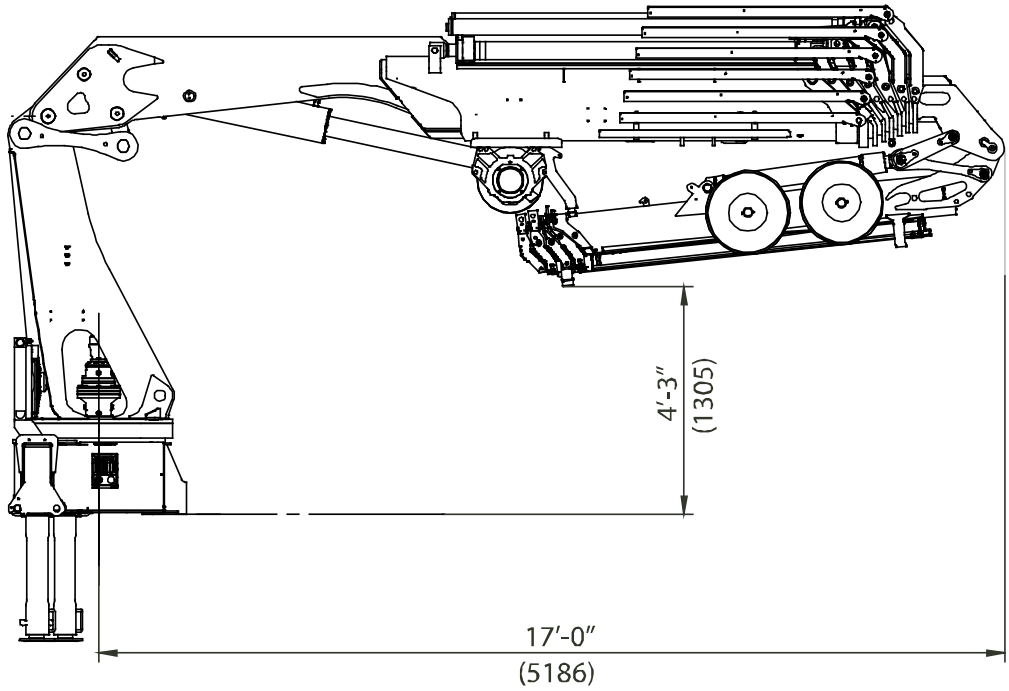

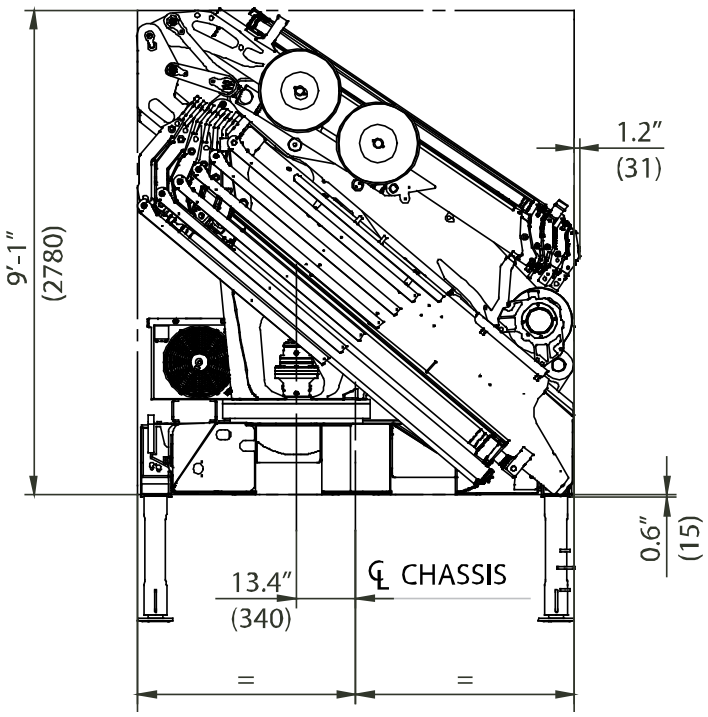

40 / 275 - Dimensional Drawing

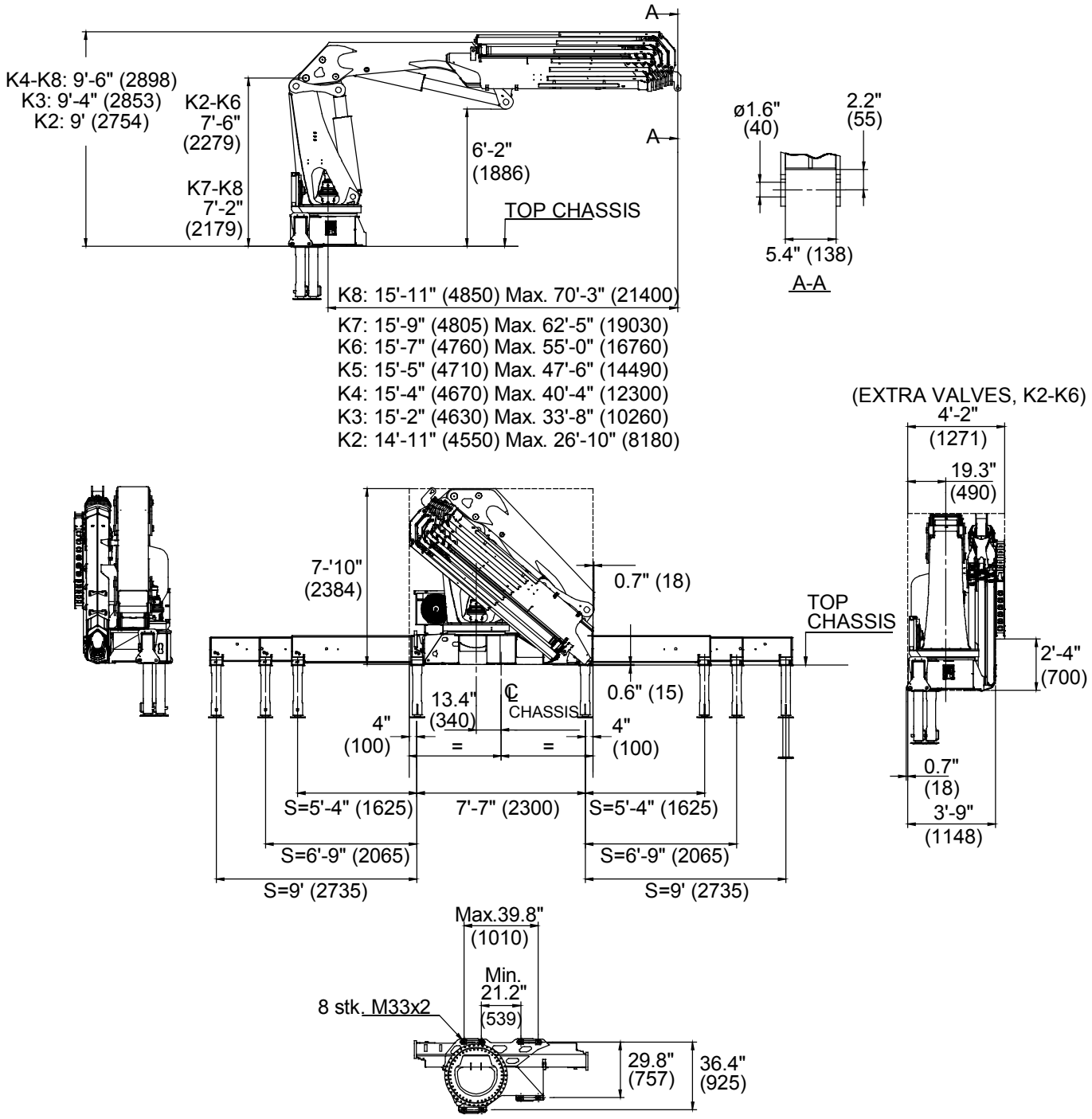

40 / 275 - Winch Dimensions

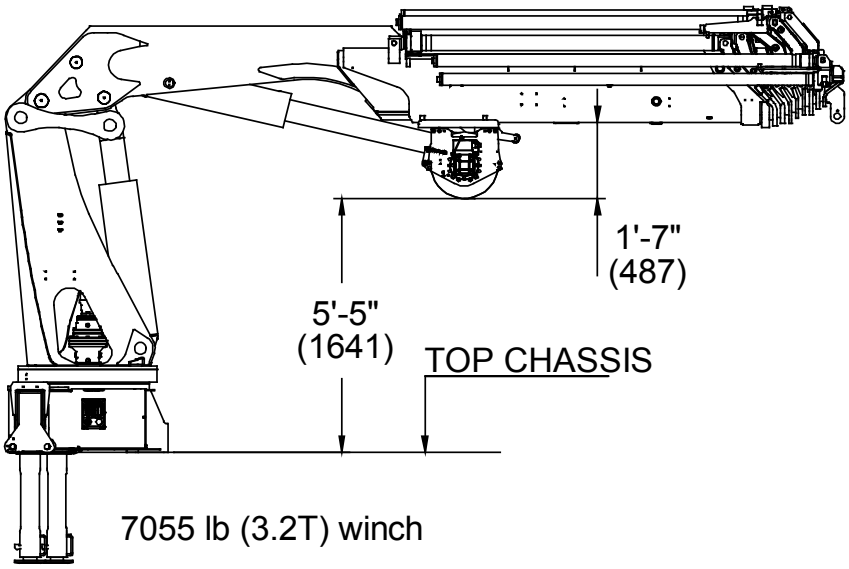

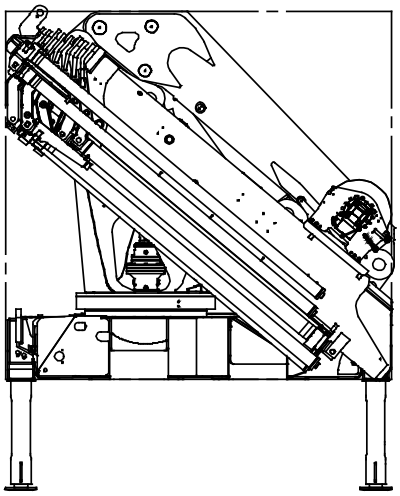

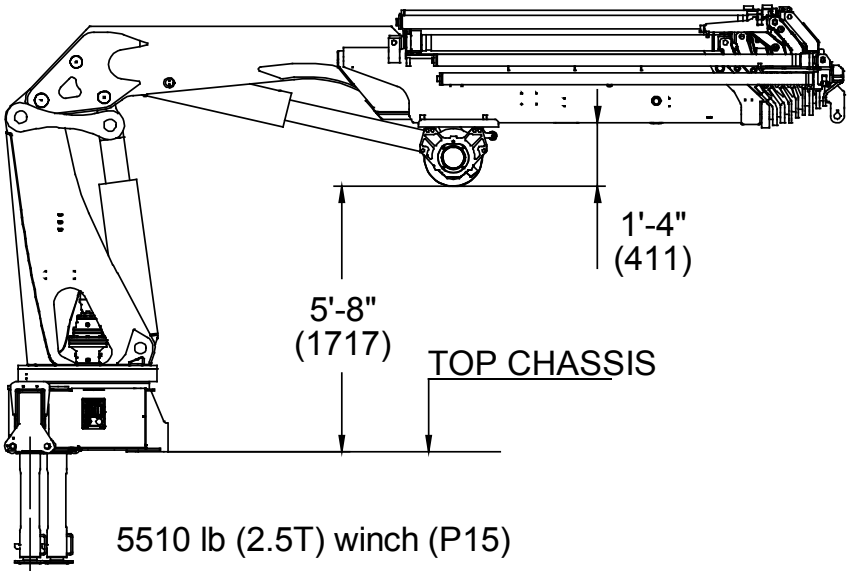

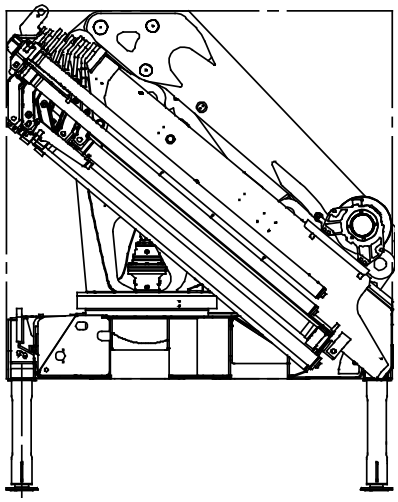

40 / 275 - Dimensions when Stowed in Truck

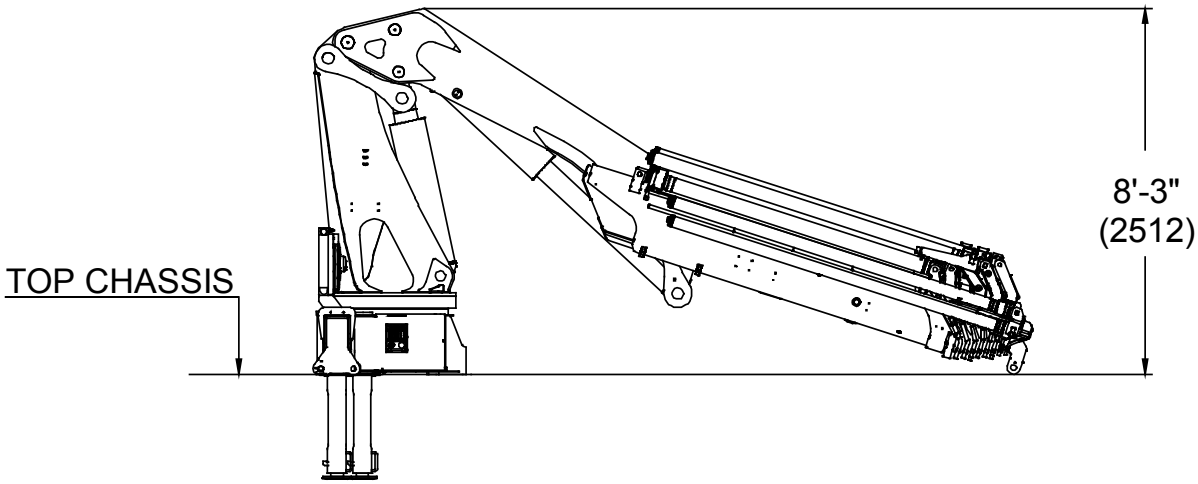

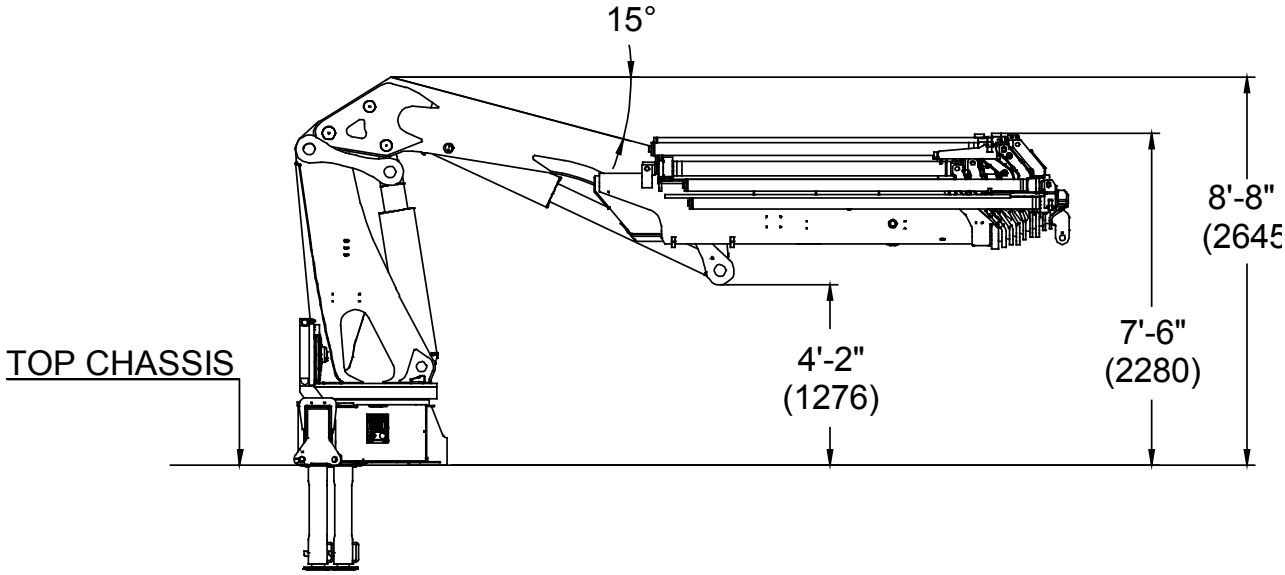

40 / 275 - Swing Radius

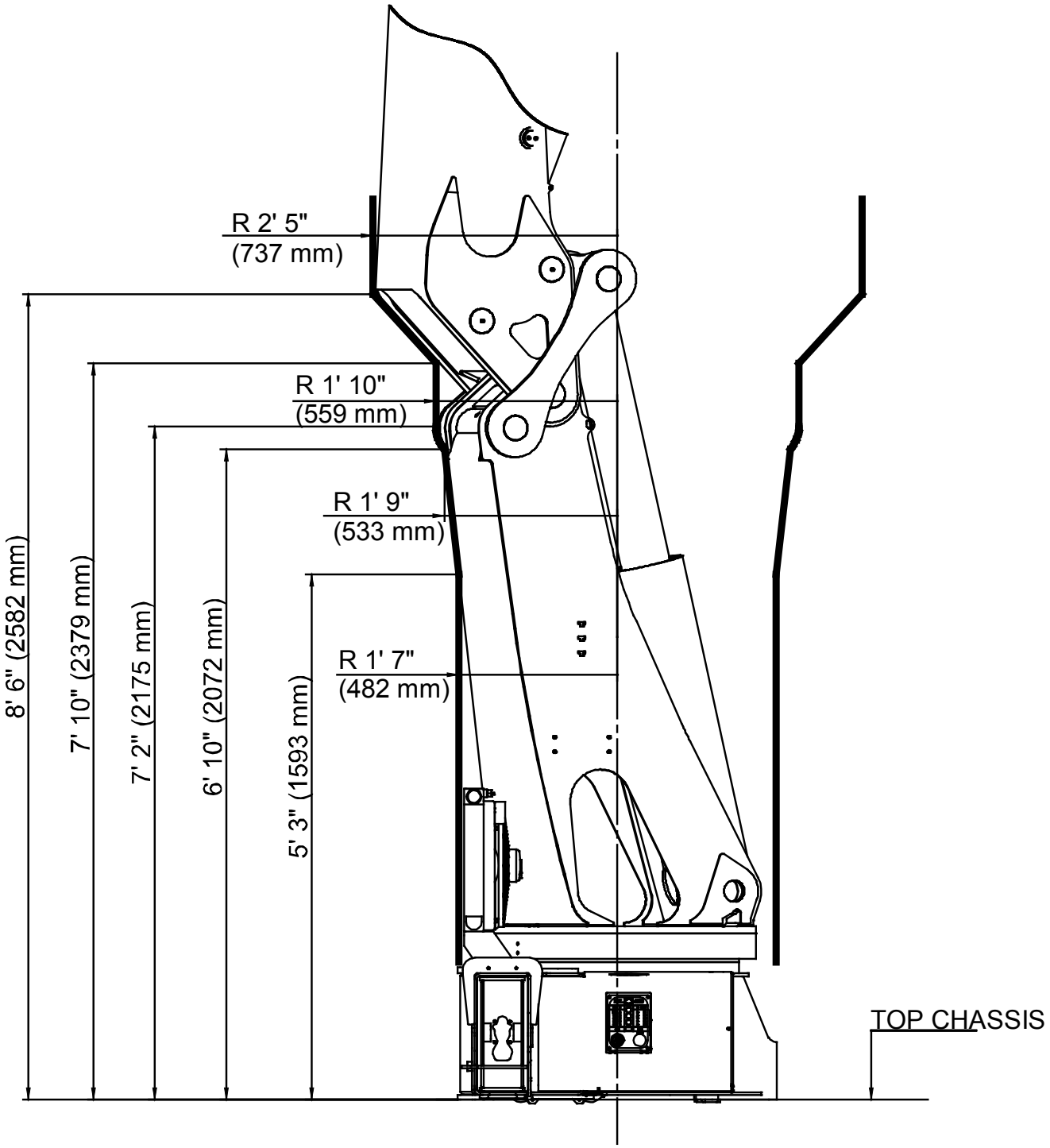

40 / 275 - Dimension Sketch, Winch

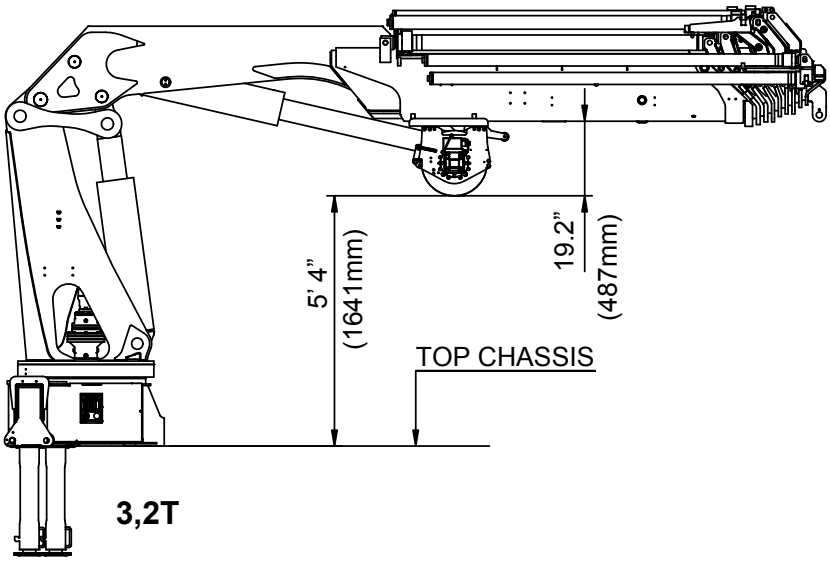

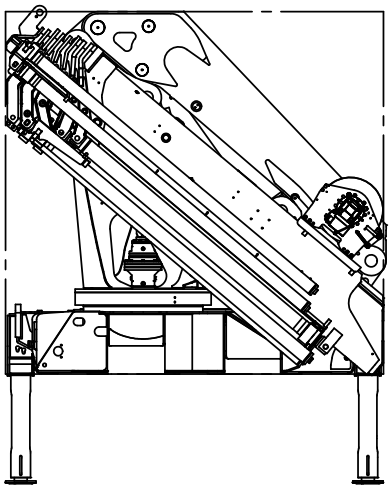

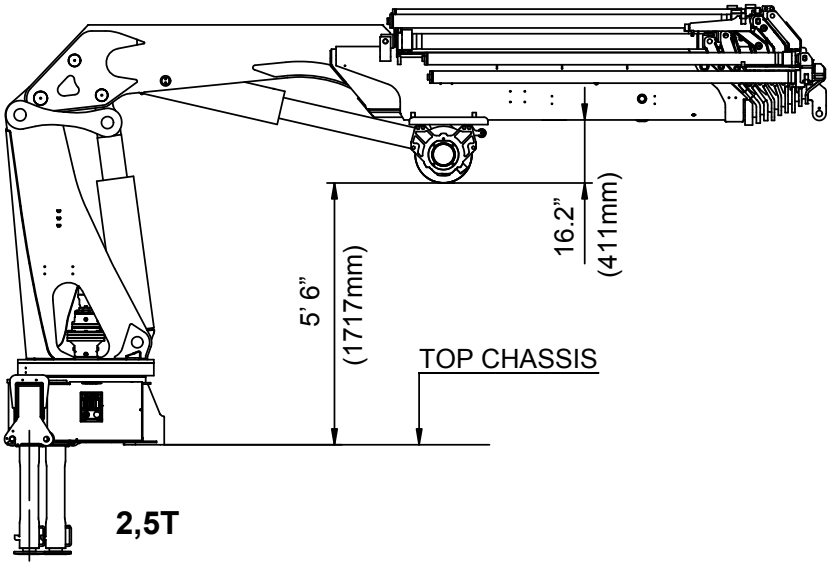

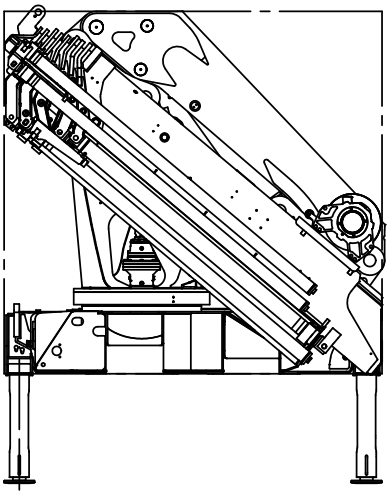

40 / 275 - Dimension Sketch, Hose Routing

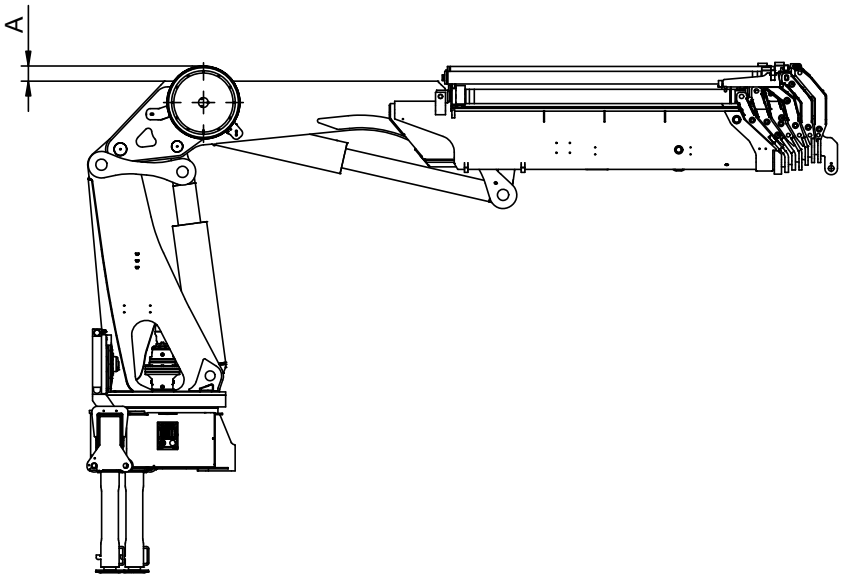

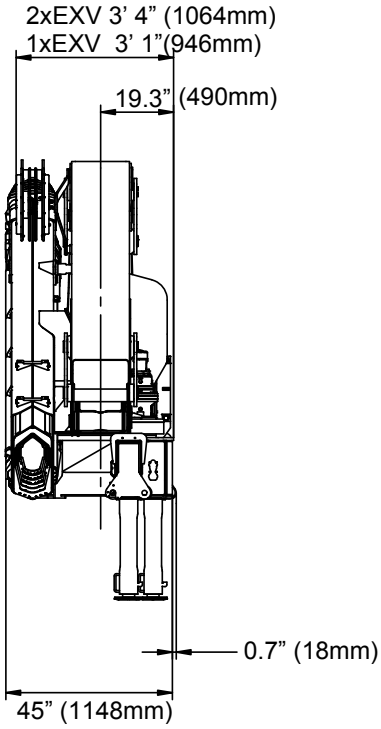

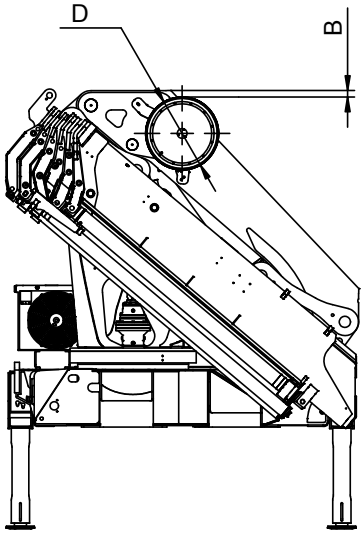

	D (1EXV)	D (2EXV)	A (1EXV)	A (2EXV)	B (1EXV)	B (2EXV)
K2-K3	20.6”	20.4”	5”	4.9”	1.6”	1.7”
K2-K3 (Metric)	525mm	520mm	128mm	125mm	41mm	43mm
K4-K5	24.2”	22.4”	6.6”	5.2”	0	0.8”
K4-K5 (Metric)	615mm	570mm	168mm	138mm	0	20mm
K6	24.2”	24.2”	6.6”	6.6”	0	0
K6 (Metric)	615mm	615mm	168mm	168mm	0	0

40 / 275 - Dimension Sketch, TS-RC

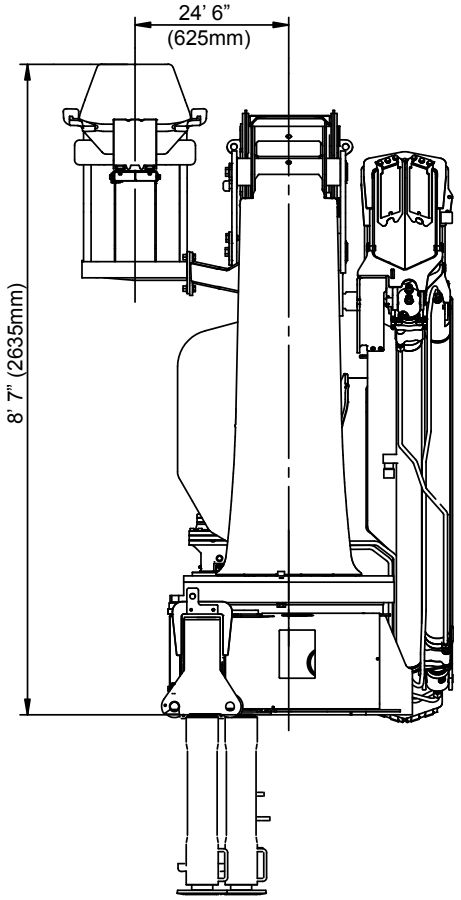

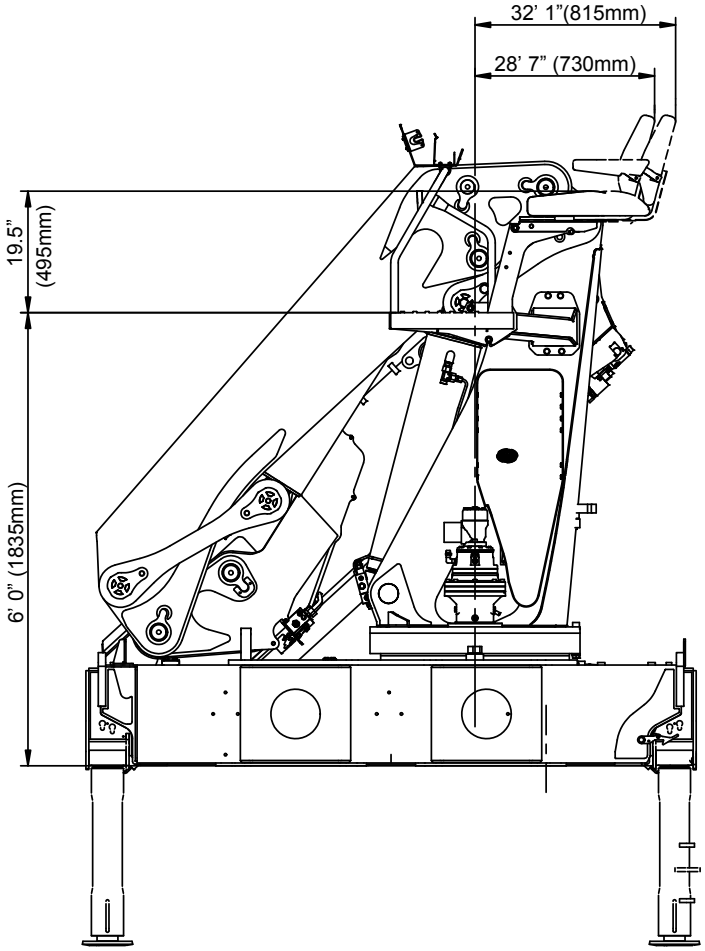

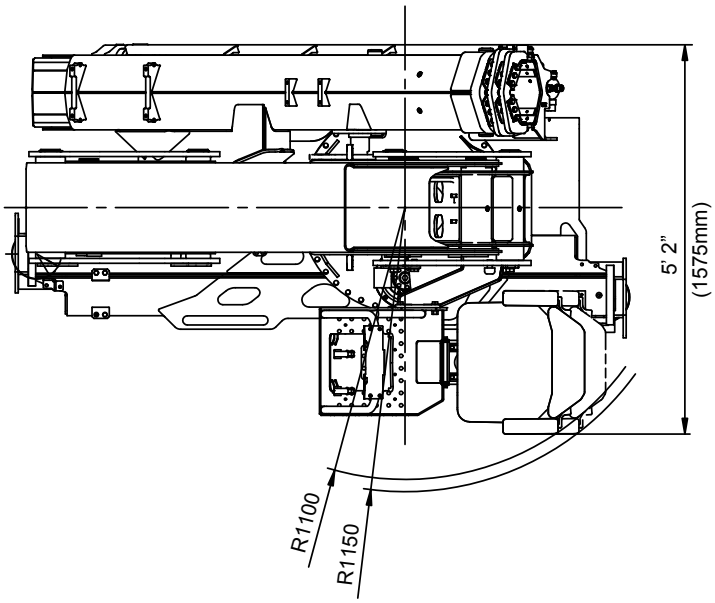

40 / 275 - Centers of Gravity

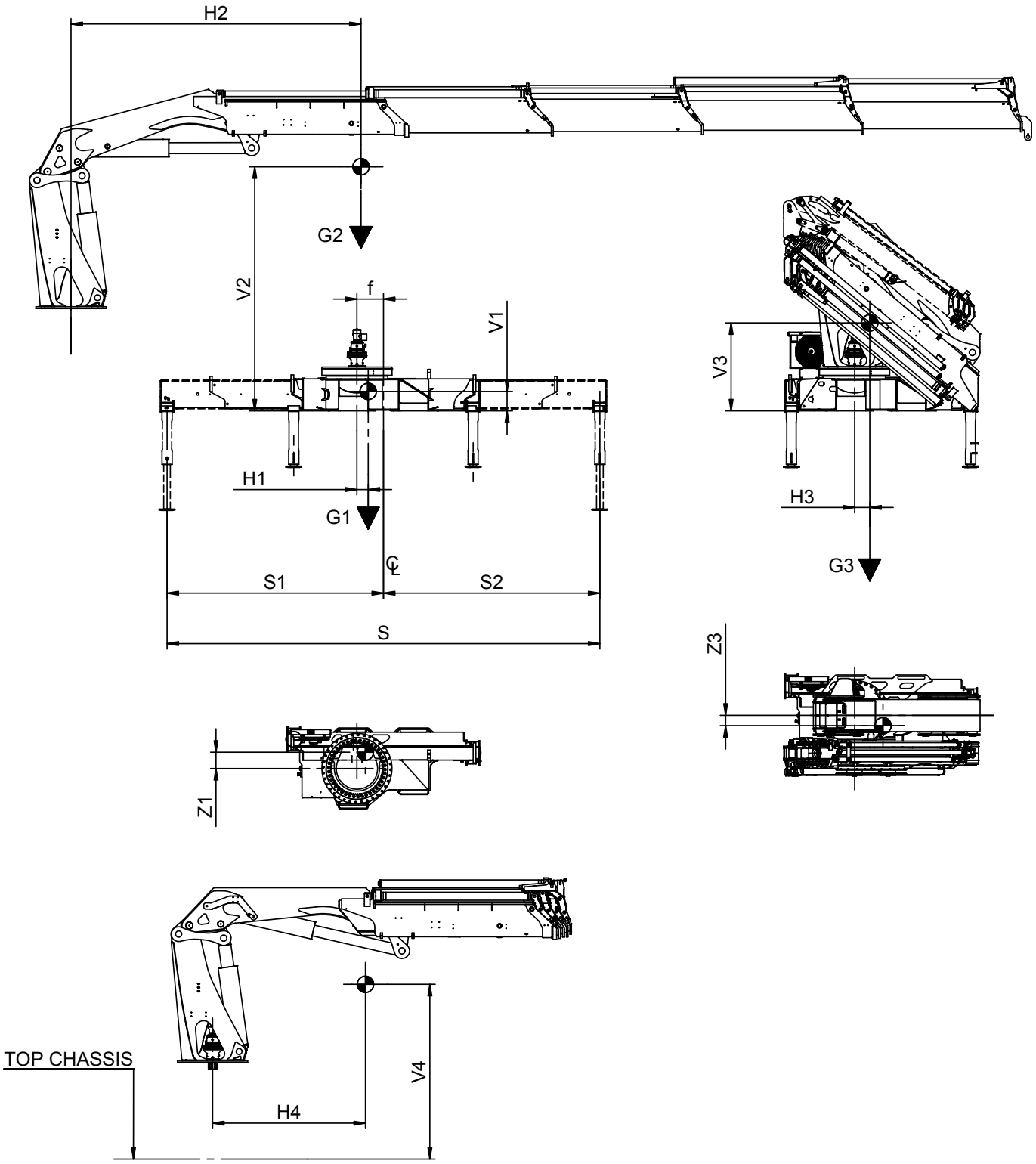

40 / 275 - Dimension Sketch, with FJ1000

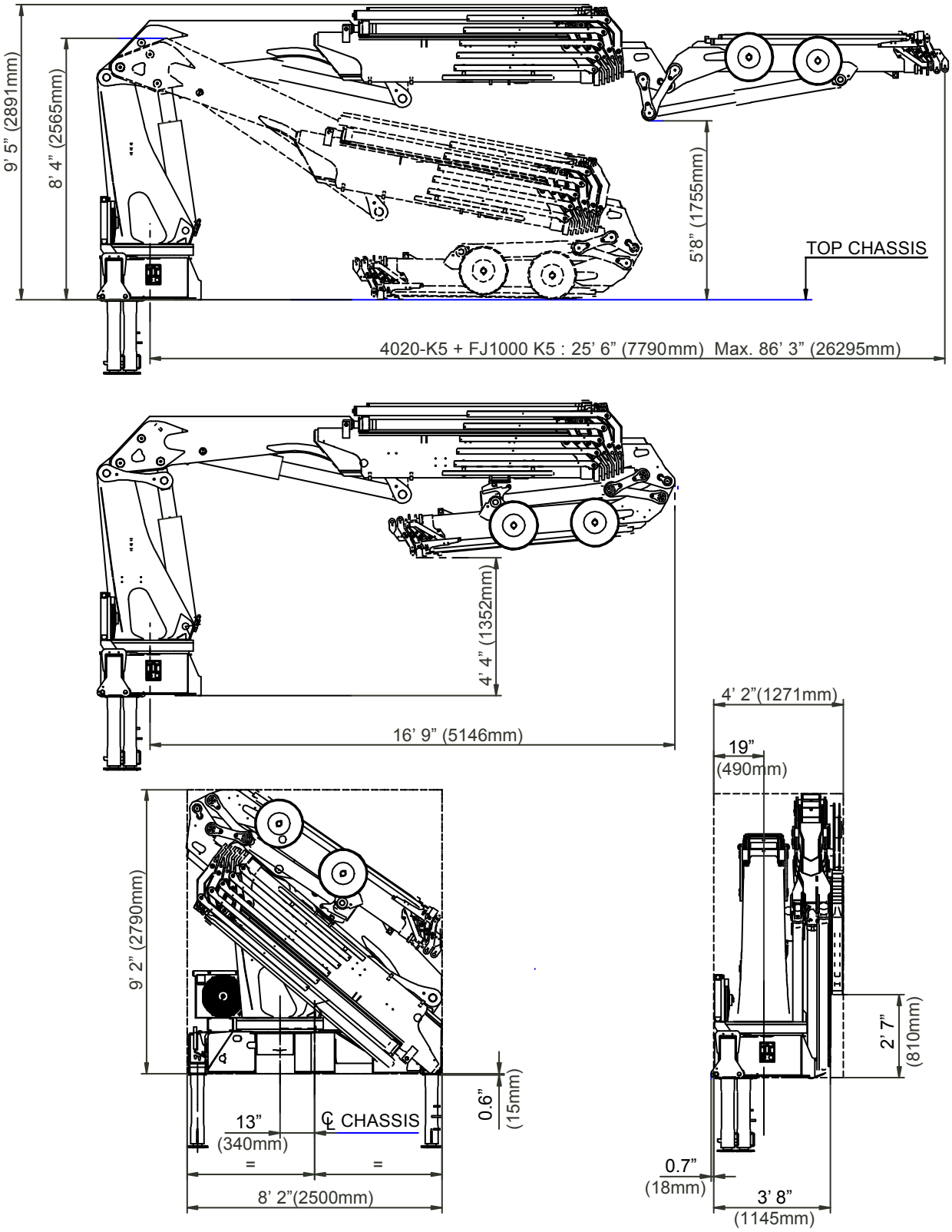
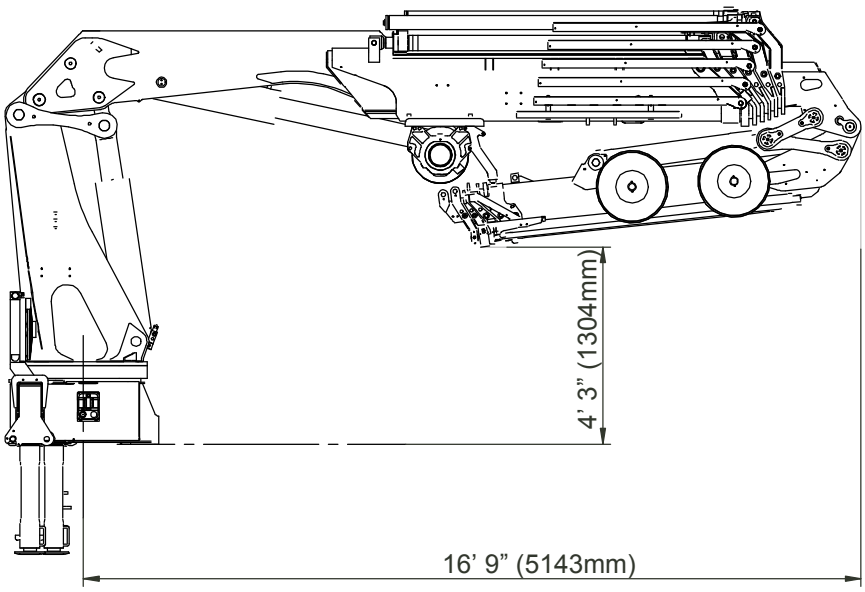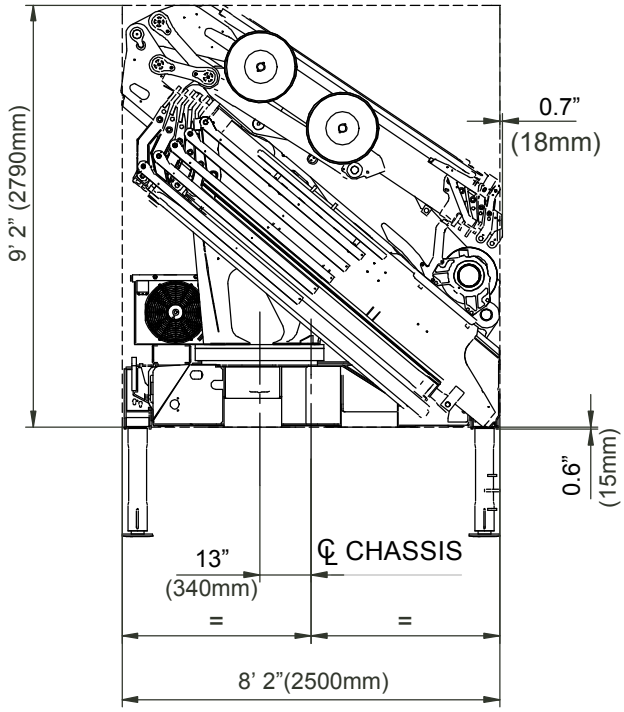
40 / 275 - Dimension Sketch, K5 with FJ1000 with Winch