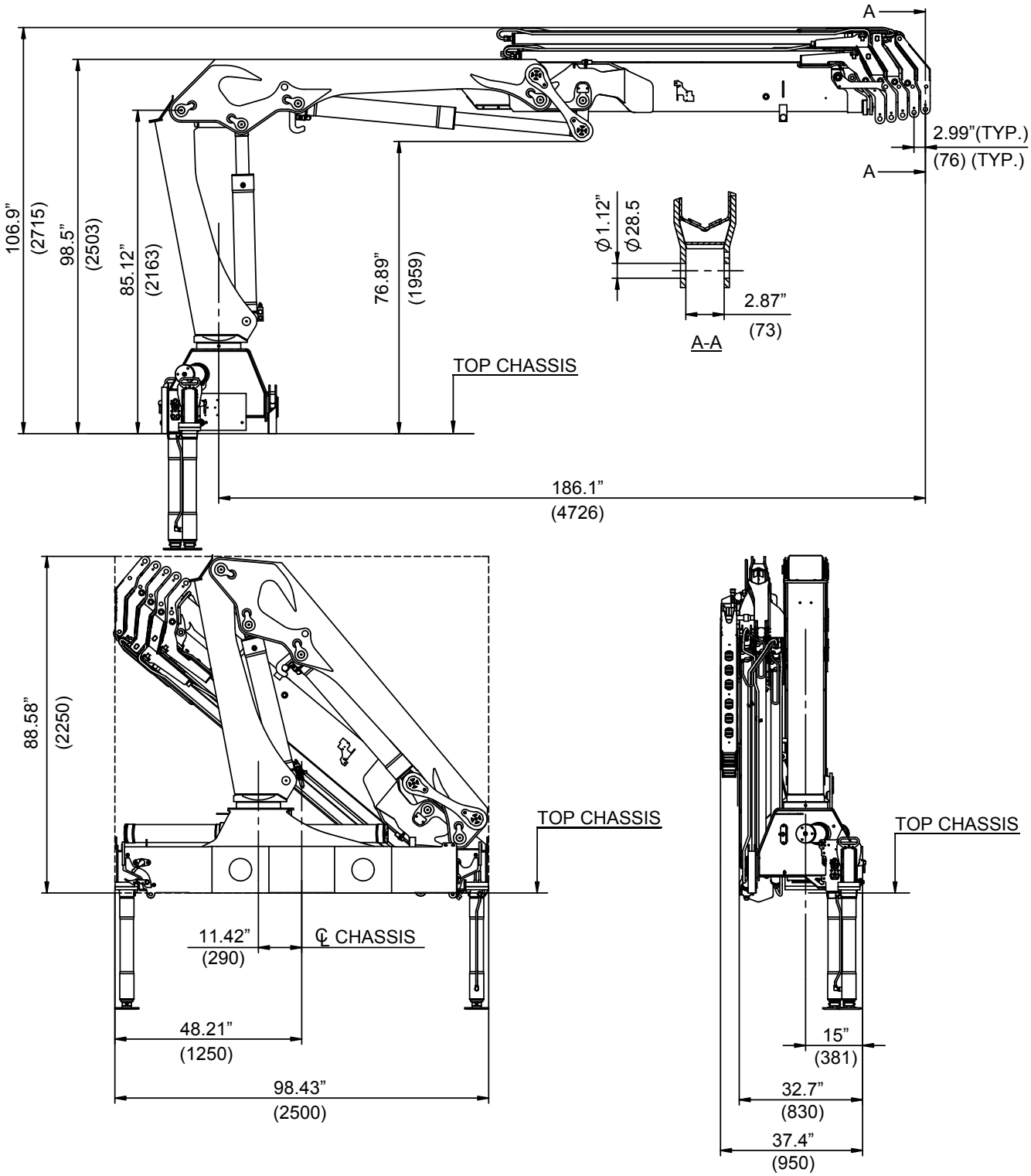1610 - RCS, Dimension Sketch