## 2810 RCS - Dimension sketch

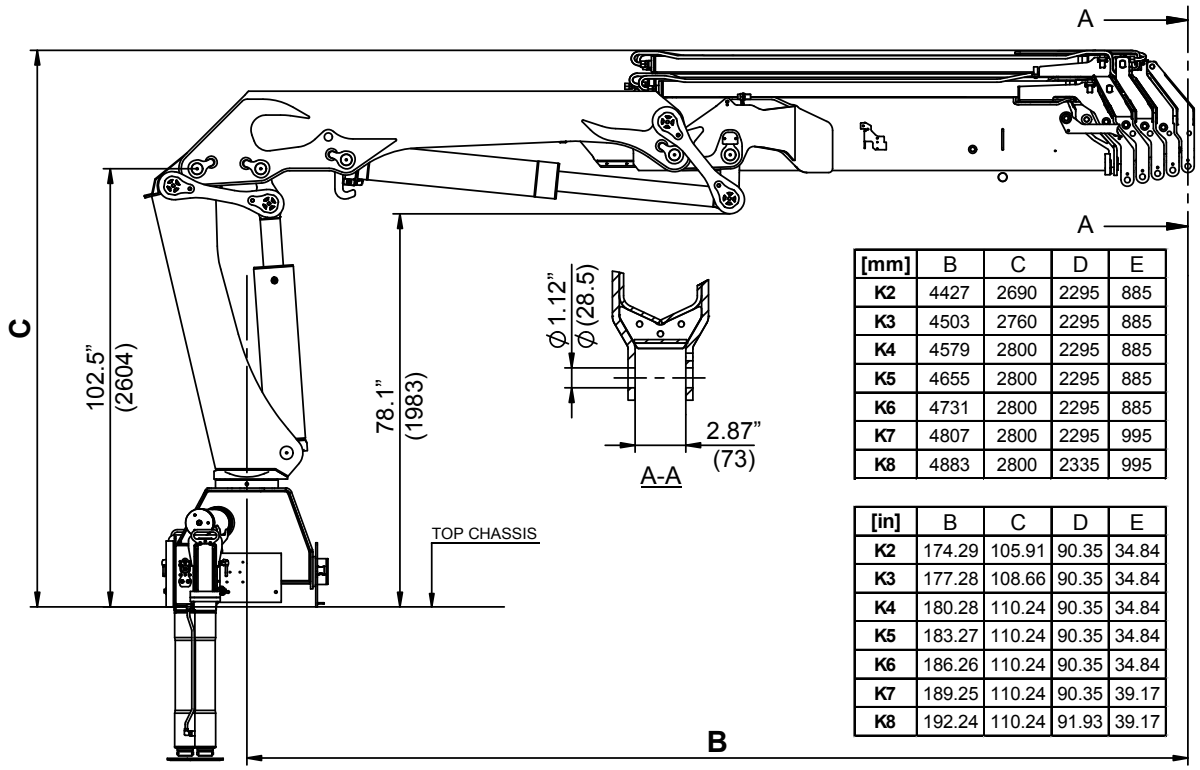


| [mm] | B | C | D | E |
|---|---|---|---|---|
| K2 | 4427 | 2690 | 2295 | 885 |
| K3 | 4503 | 2760 | 2295 | 885 |
| K4 | 4579 | 2800 | 2295 | 885 |
| K5 | 4655 | 2800 | 2295 | 885 |
| K6 | 4731 | 2800 | 2295 | 885 |
| K7 | 4807 | 2800 | 2295 | 995 |
| K8 | 4883 | 2800 | 2335 | 995 |
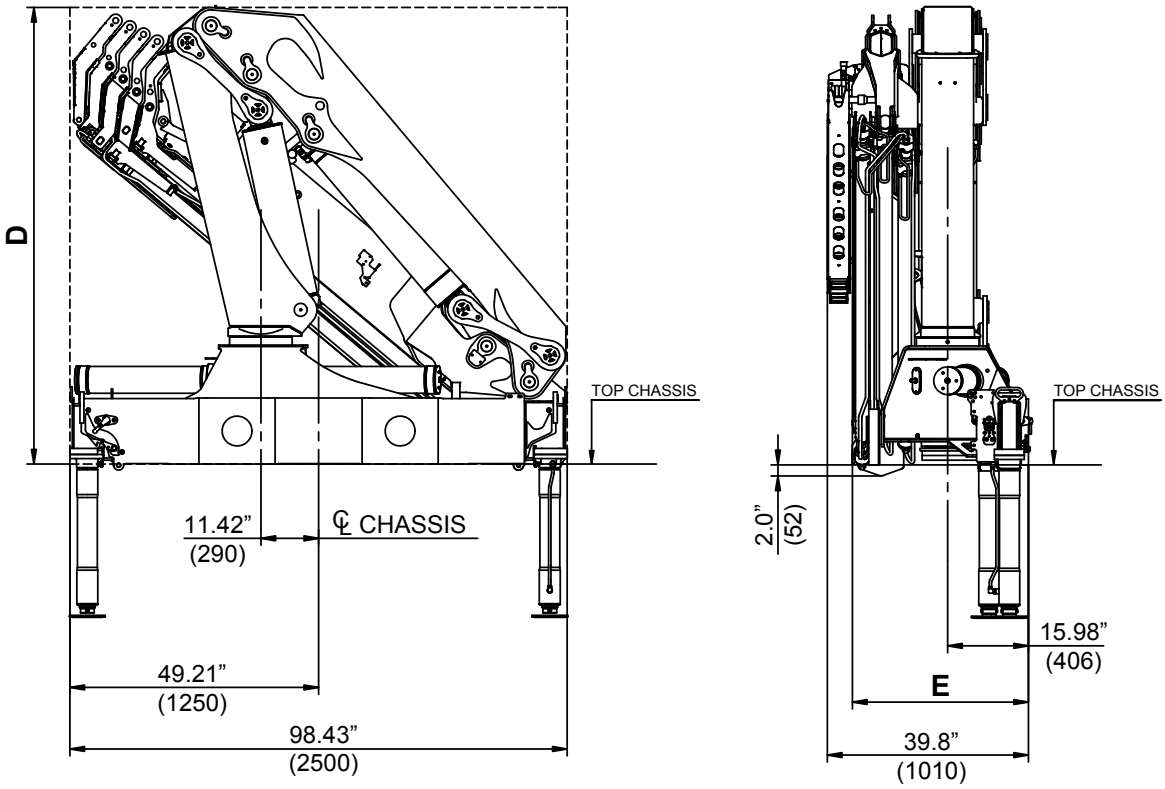
| [in] | B | C | D | E |
|---|---|---|---|---|
| K2 | 174.29 | 105.91 | 90.35 | 34.84 |
| K3 | 177.28 | 108.66 | 90.35 | 34.84 |
| K4 | 180.28 | 110.24 | 90.35 | 34.84 |
| K5 | 183.27 | 110.24 | 90.35 | 34.84 |
| K6 | 186.26 | 110.24 | 90.35 | 34.84 |
| K7 | 189.25 | 110.24 | 90.35 | 39.17 |
| K8 | 192.24 | 110.24 | 91.93 | 39.17 |