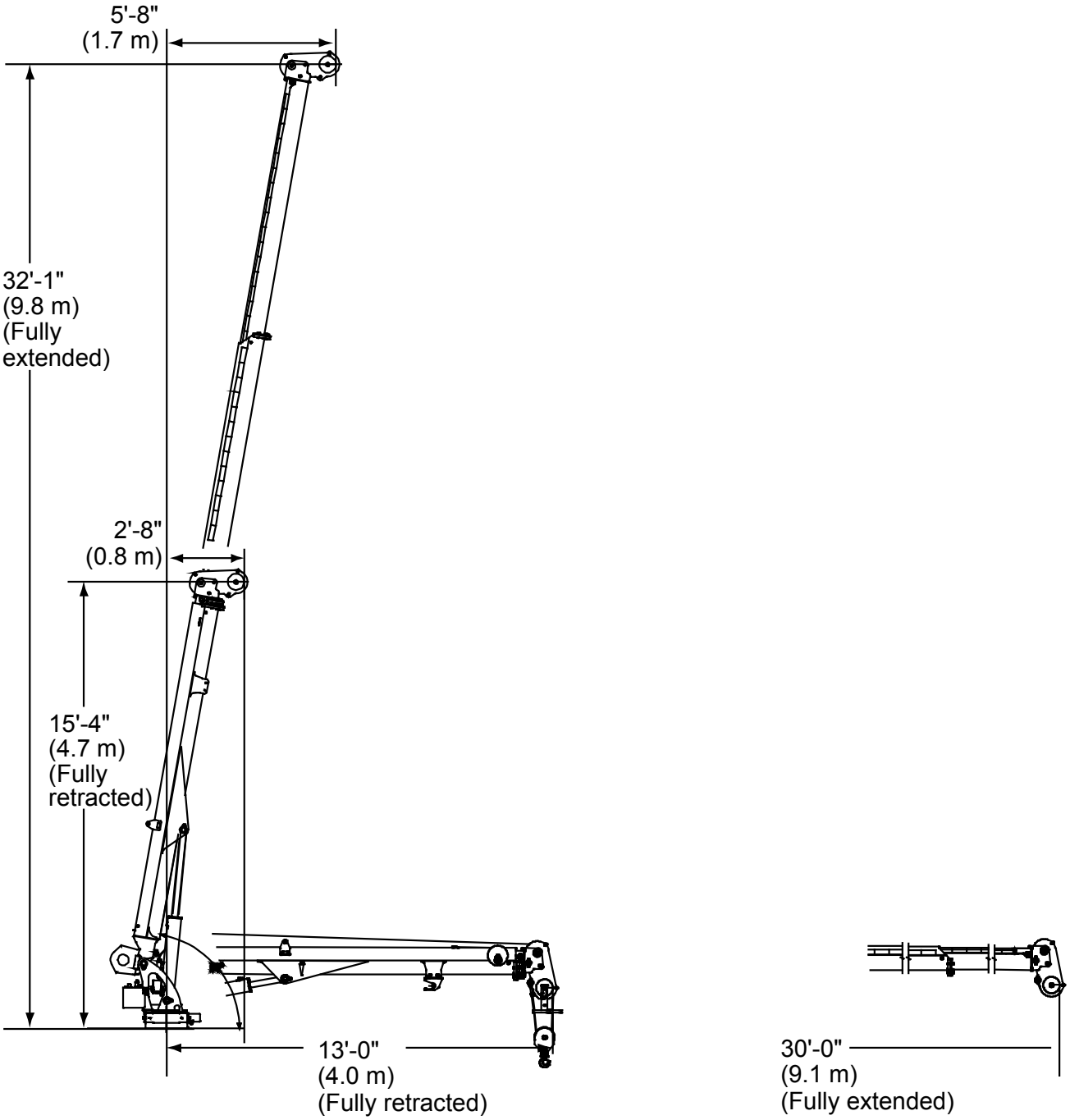## Dimension Sketch