OVERALL DIMENSIONS

SPX328CL

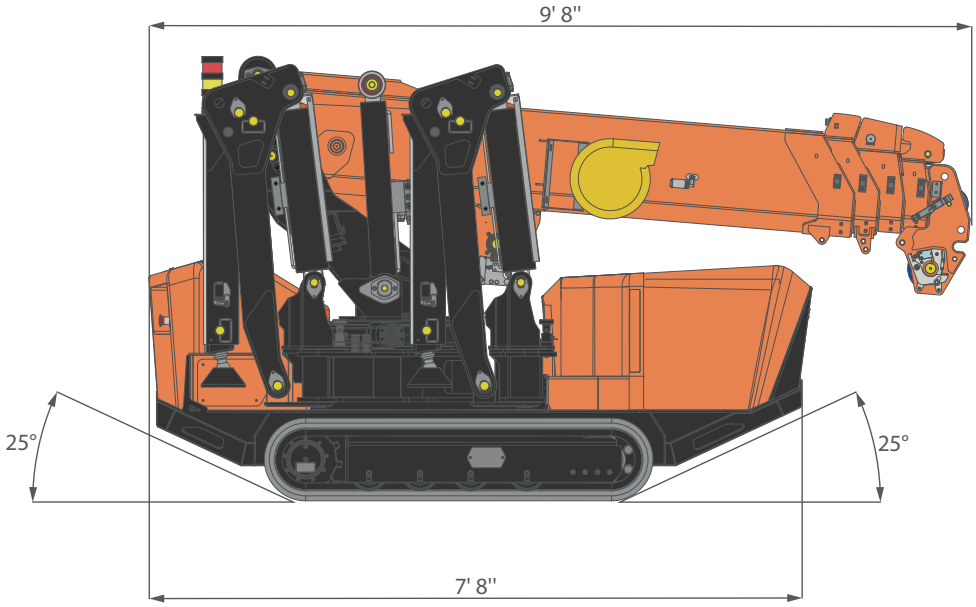

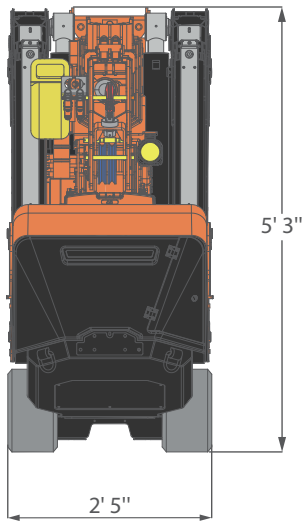

STABILITY DIMENSIONS

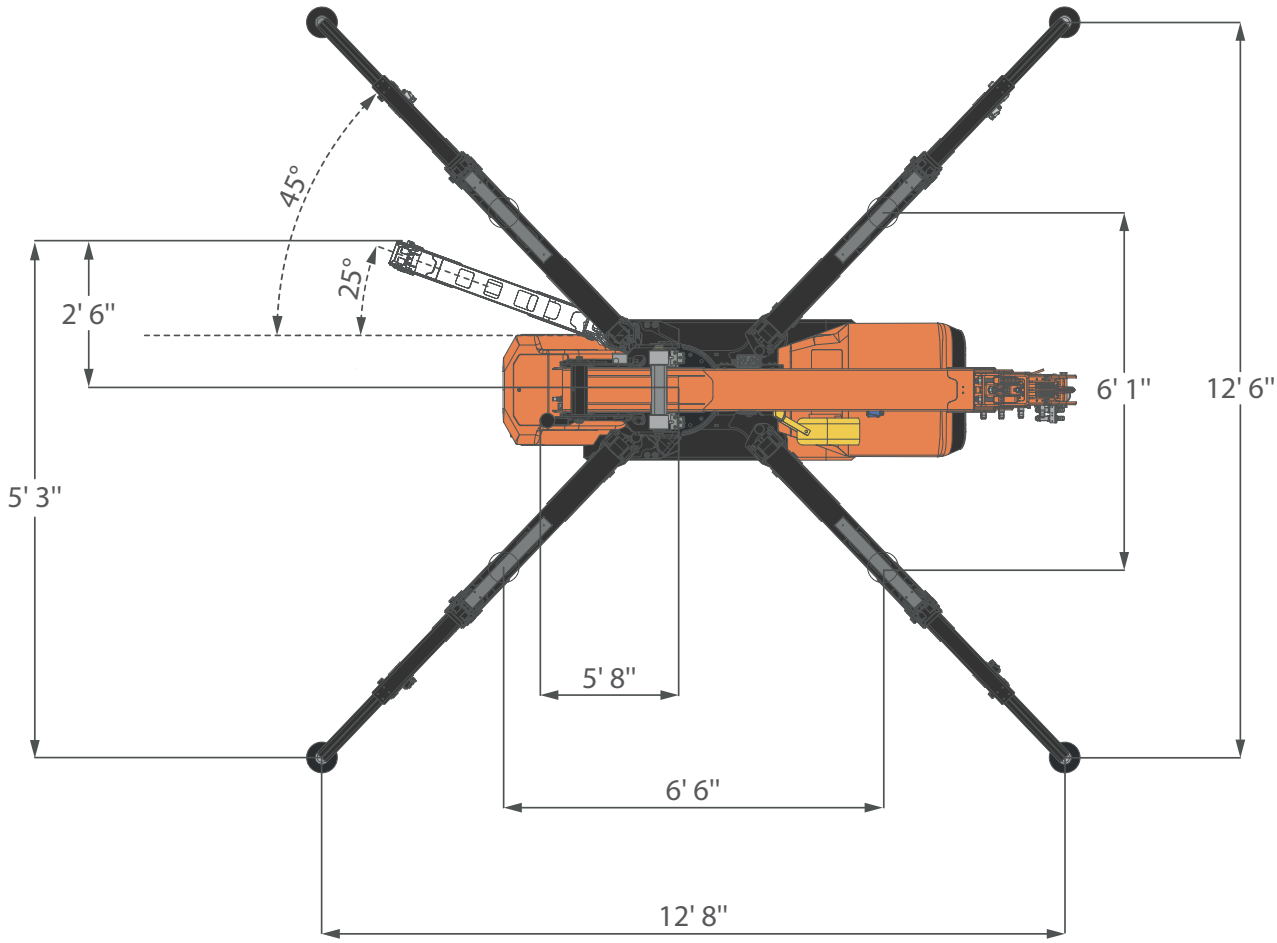

[in]