Dimensions
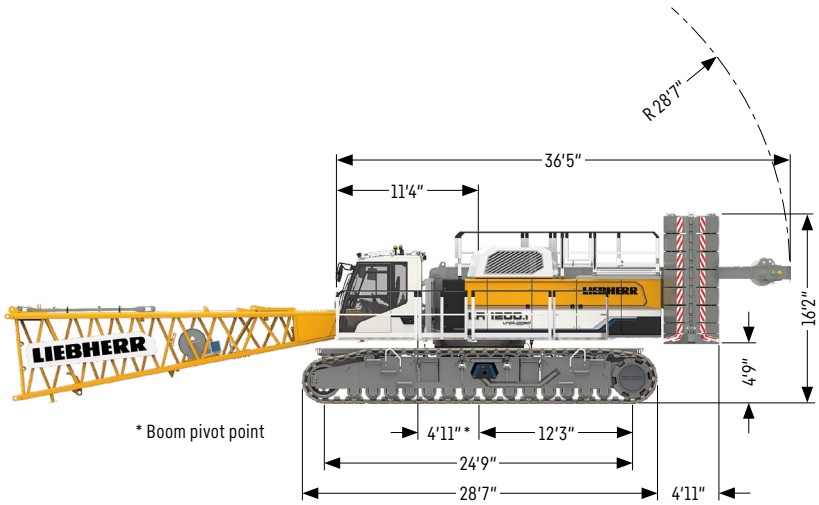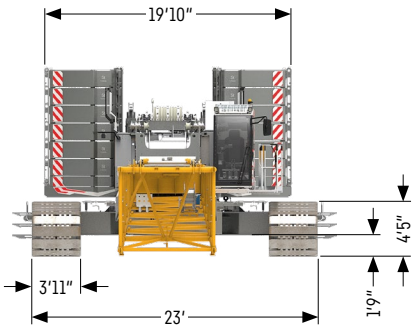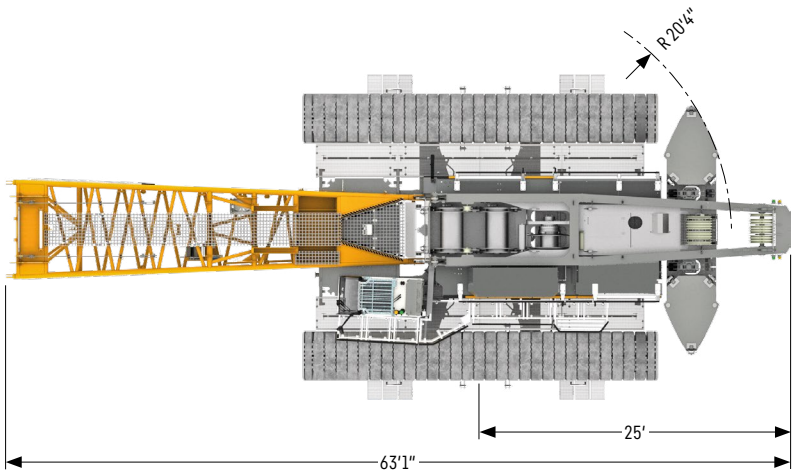
Basic machine with undercarriage