General Dimensions

■ EPA 2021

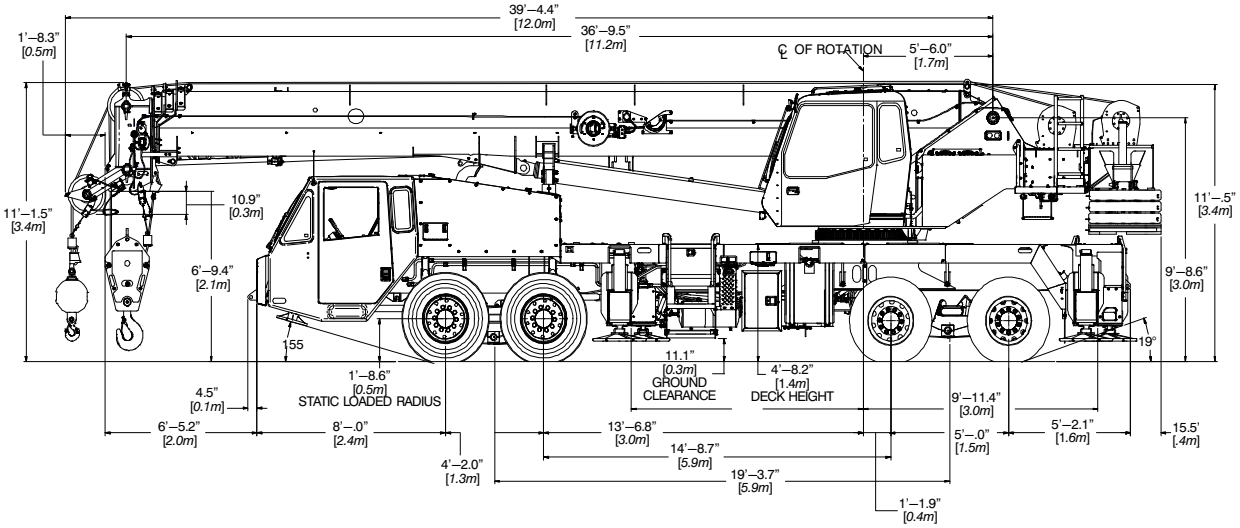

Turning Radius	English	*Metric*
Wall to wall over carrier	44' 1"	*13.4m*
Wall to wall over boom	45' 6"	*13.9m*
Wall to wall over boom attachment	46' 11"	*14.3m*
Centerline of tire	38' 7"	*11.8m*
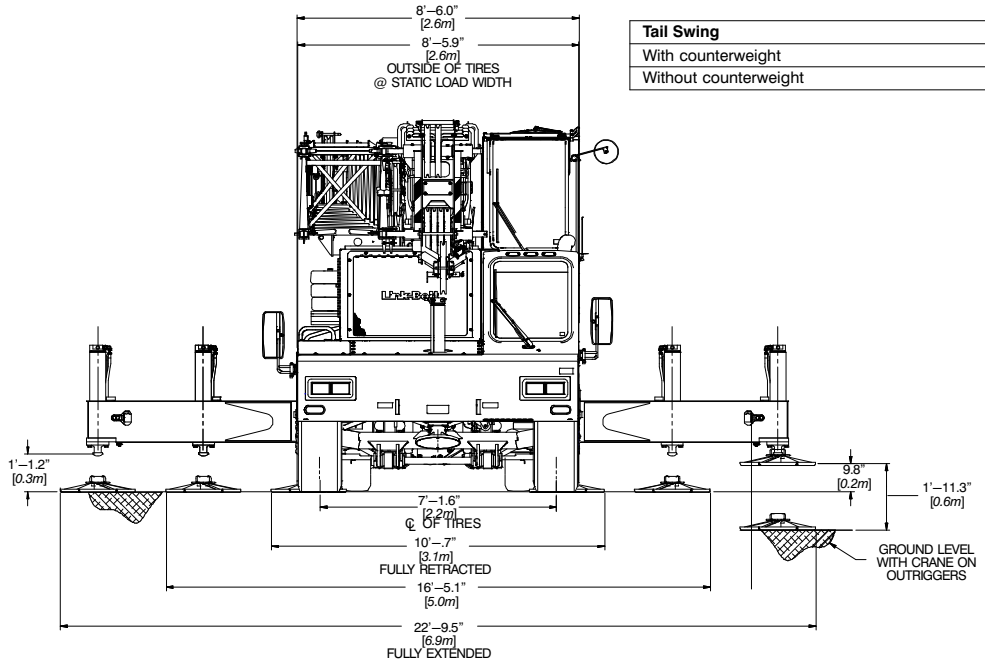
Tail Swing	English	*Metric*
With counterweight	12' 8.5"	*3.9m*
Without counterweight	12' 5.25"	*3.8m*