General Dimensions

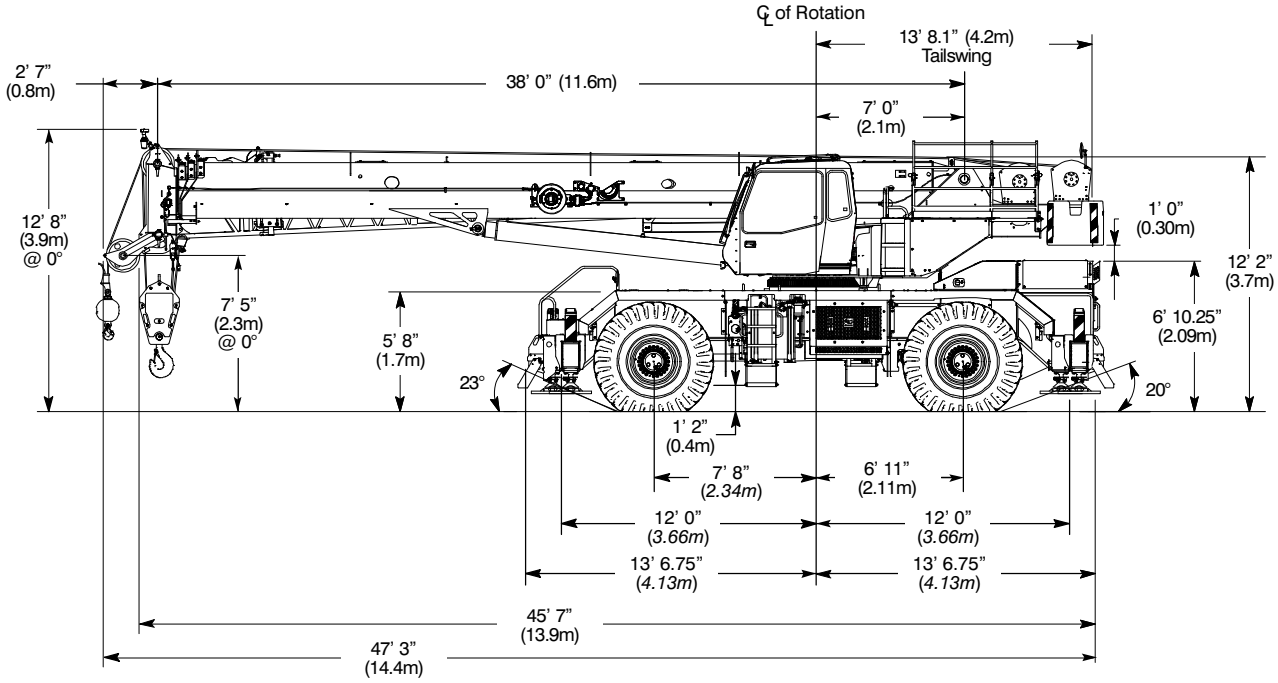

Turning Radius — Front Wheel (4x2) Steering	English	*Metric*
Wall to wall over carrier	43' 2"	*13.2m*
Wall to wall over boom attachment	53' 3"	*16.2m*
Curb to curb	41' 6"	*12.6m*
Centerline of tire	40' 0"	*12.2m*

Turning Radius — All Wheel (4x4) Steering	English	*Metric*
Wall to wall over carrier	26' 6"	*8.1m*
Wall to wall over boom attachment	38' 0"	*11.6m*
Curb to curb	24' 10"	*7.6m*
Centerline of tire	23' 6"	*7.2m*

Tail Swing	English	*Metric*
With counterweight	13' 8.14"	*4.2m*
Without counterweight	N/A	*N/A*

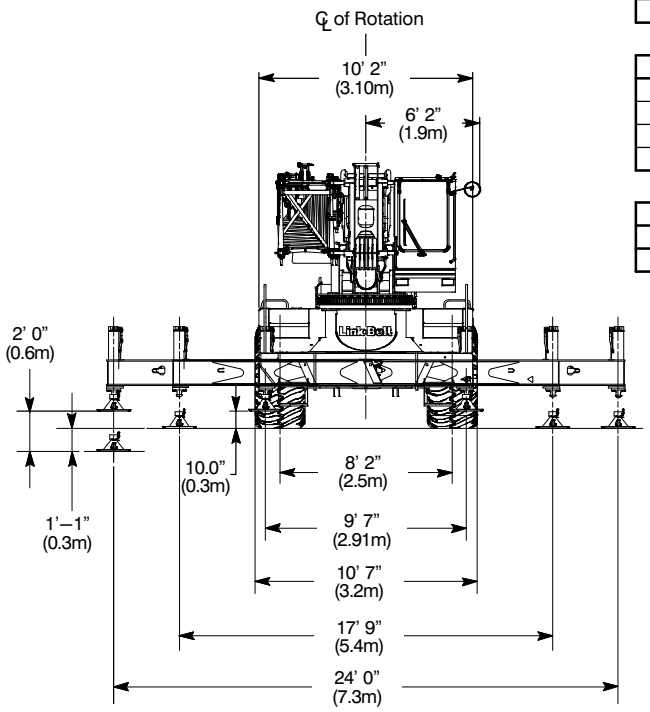

Not To Scale