47524 SP

kg m | lbs ft

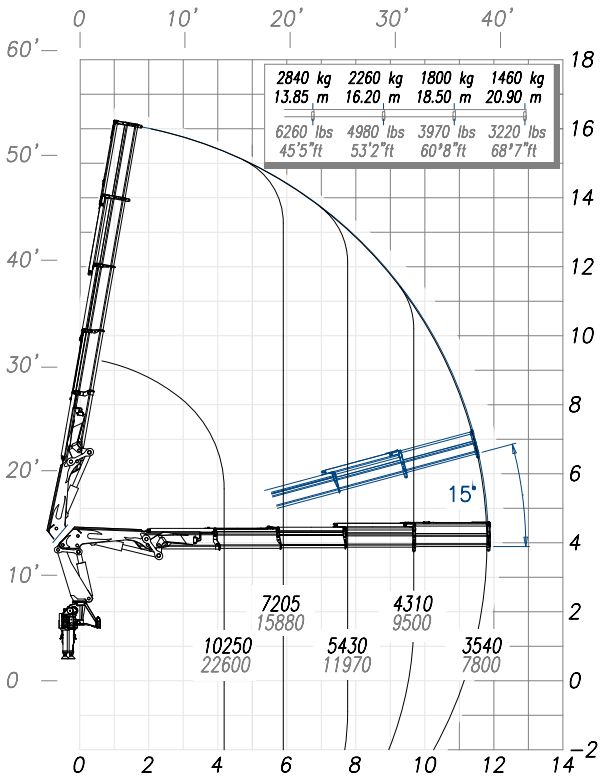

47525 SP

kg m | lbs ft

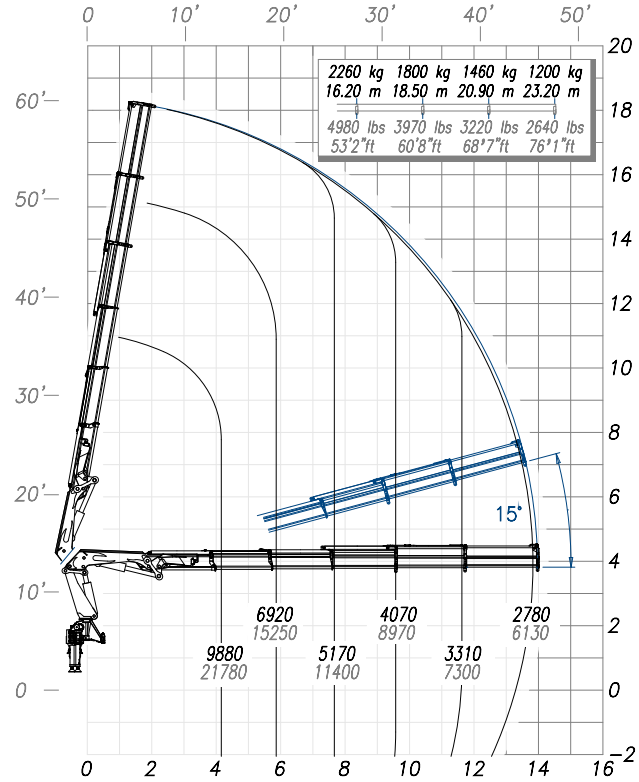

47526 SP

kg m | lbs ft

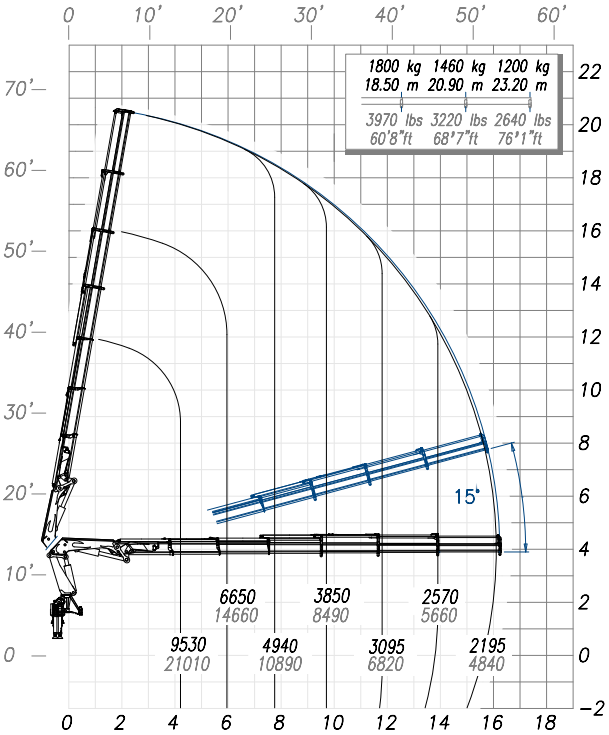

47527 SP

kg m | lbs ft

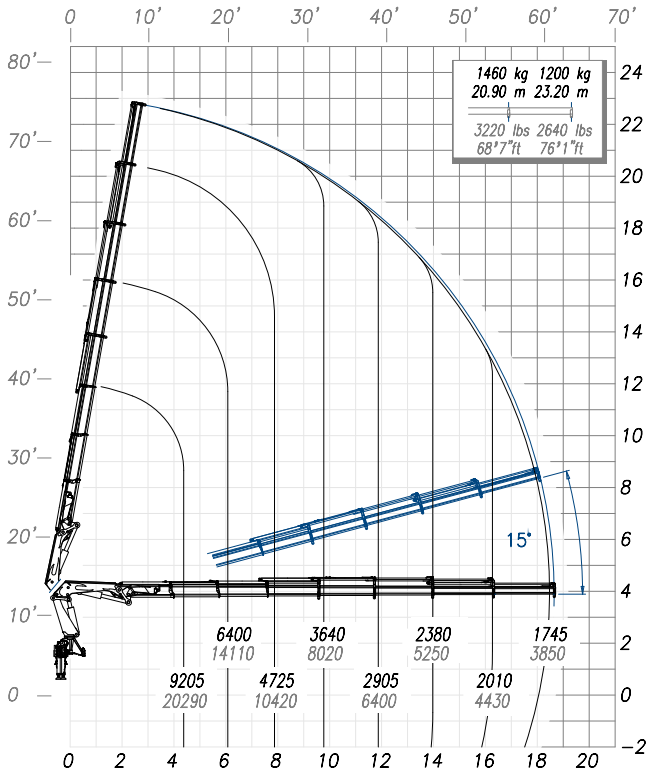

47528 **SP**

kg m | lbs ft

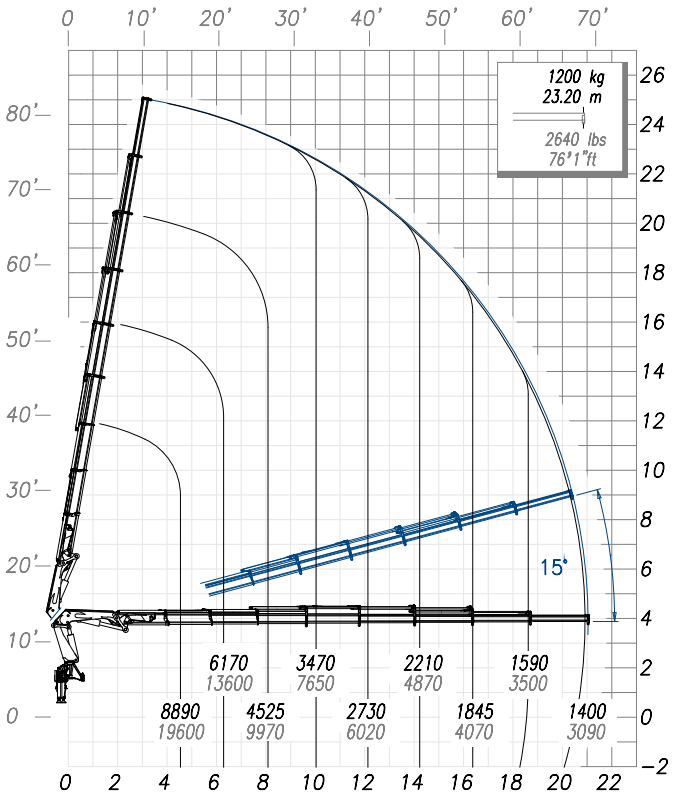

47529 **SP**

kg m | lbs ft

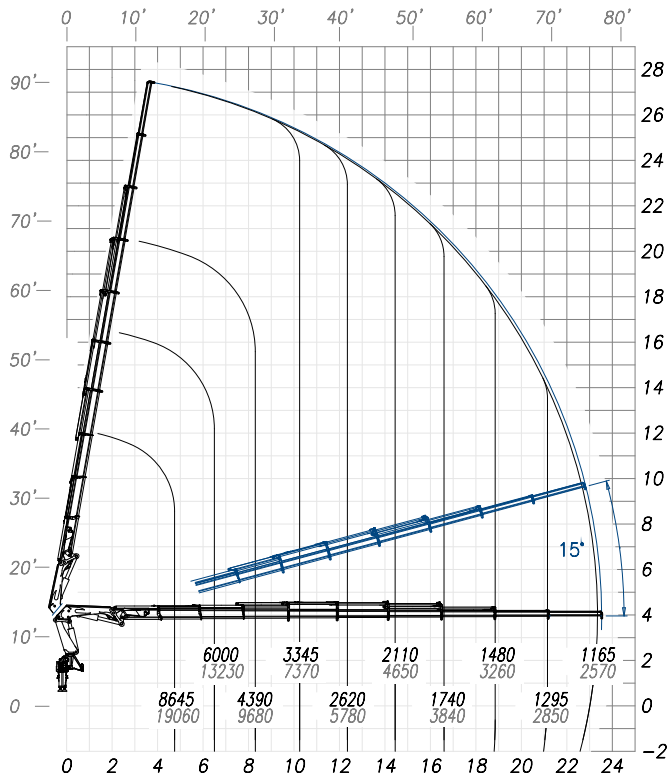

47524 **SP** + J1414.20

kg m | lbs ft

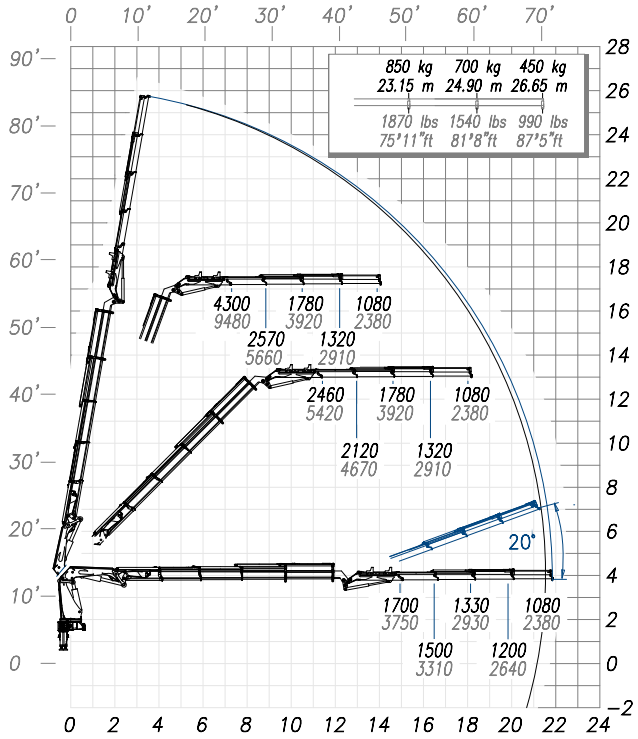

47525 SP + J1215.20

kg m | lbs ft

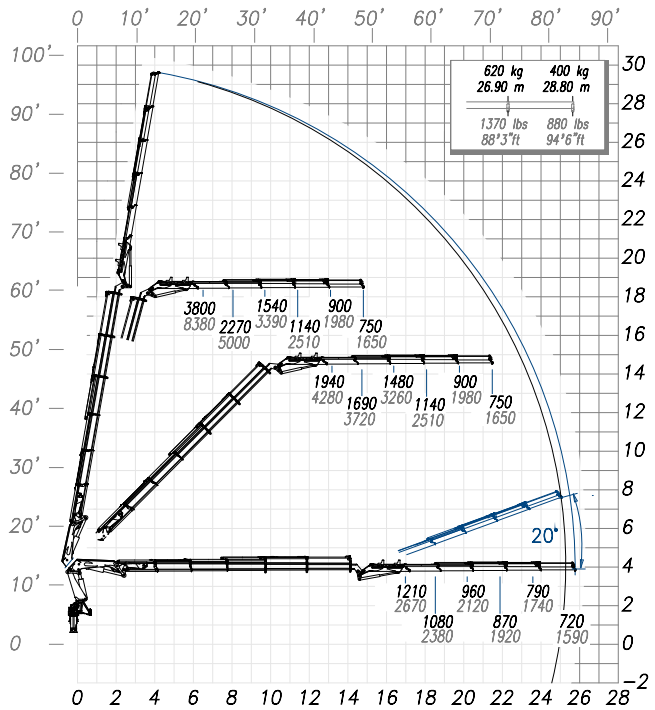

47526 **SP** + J1214.20

kg m | lbs ft

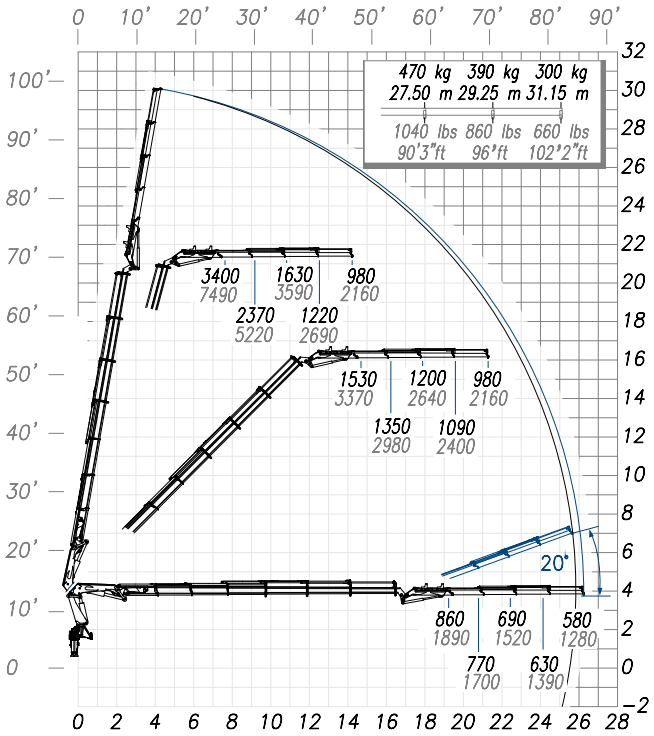

47526 **SP** + J1216.20

kg m | lbs ft

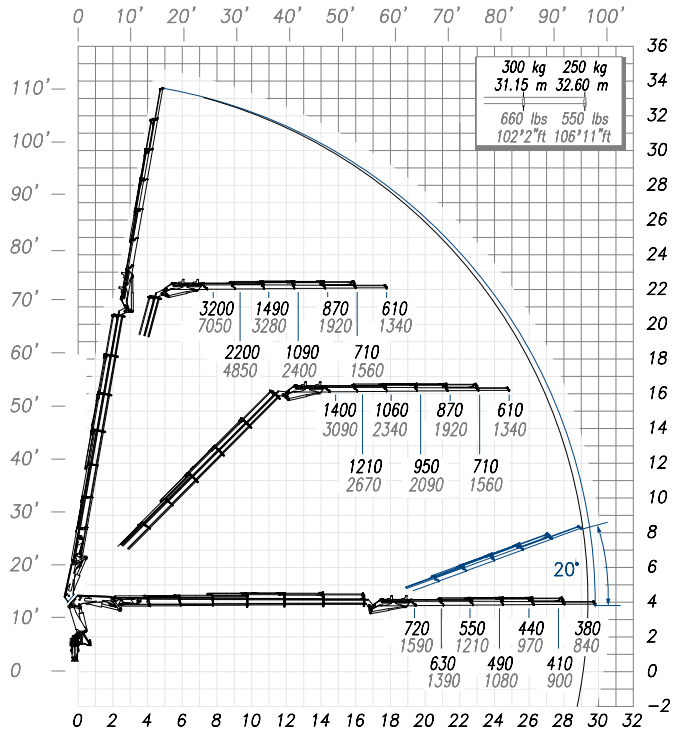

47527 **SP** + J815.20

kg m | lbs ft

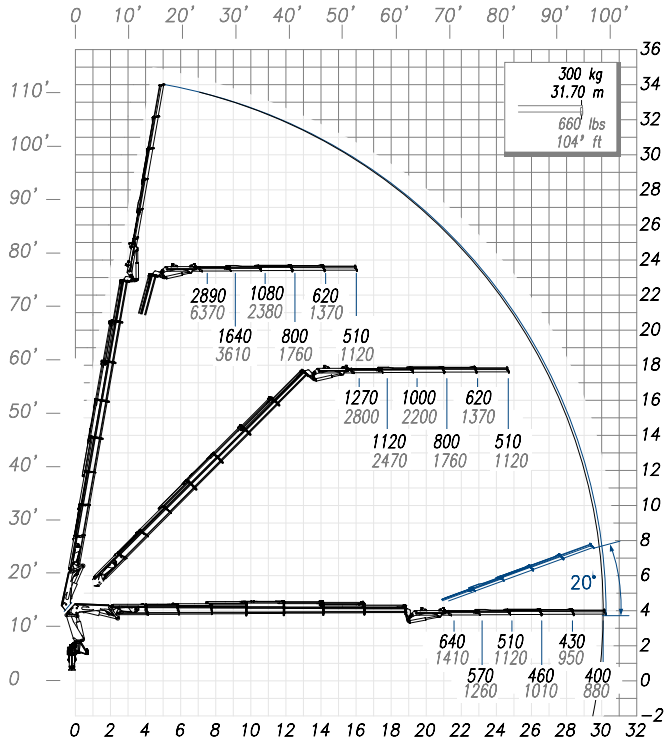

47528 **SP** + J614.20
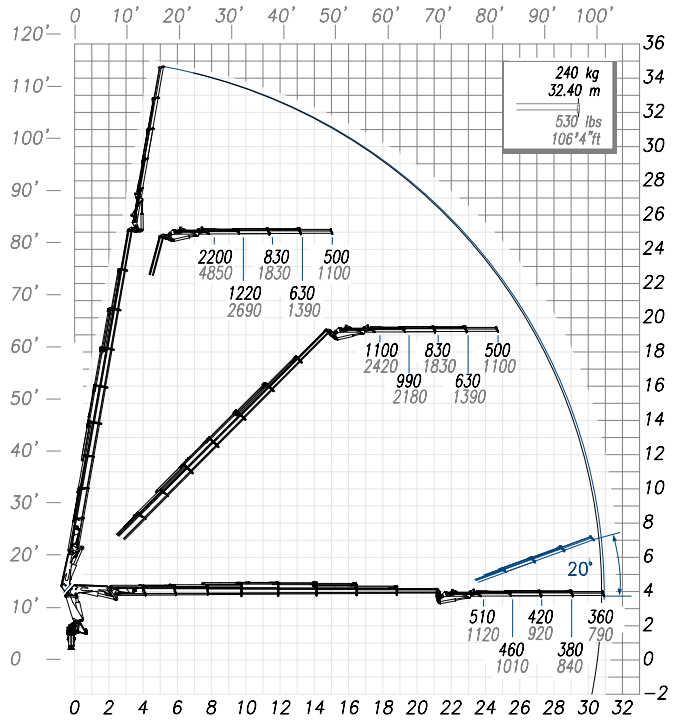
kg m | lbs ft