kg m | lbs ft

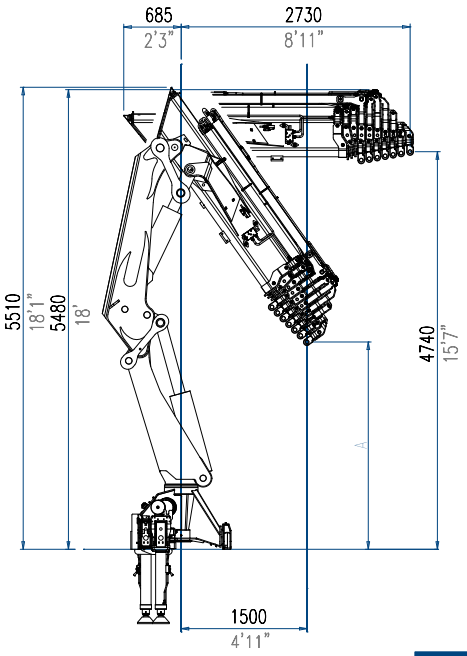

A	mm	ft
Vers.24	3090	10'2"
Vers.25	2960	9'9"
Vers.26	2840	9'4"
Vers.27	2720	8'11"
Vers.28	2600	8'6"
Vers.29	2470	8'1"

kg m | lbs ft

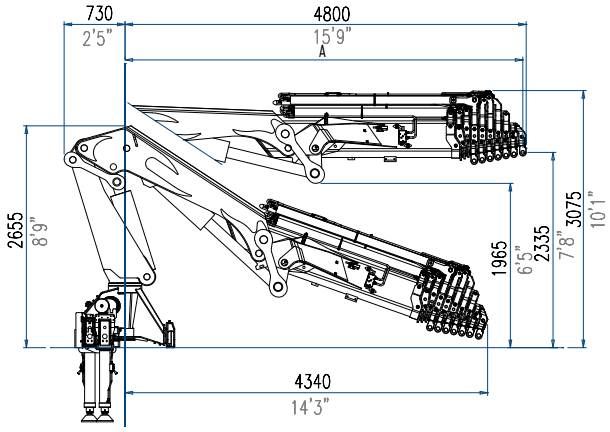

A	mm	ft
Vers.24	4270	14'
Vers.25	4365	14'4"
Vers.26	4460	14'8"
Vers.27	4555	14'11"
Vers.28	4650	15'3"
Vers.29	4755	15'7"

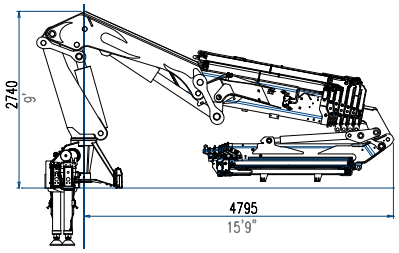

STANDARD CRANE

kg m | lbs ft

		XL	SXL
C	mm	6600	8000
	ft	21'8"	26'3"

		Fix.	Rot.
D	mm	815	970
	ft	2'11"	3'1"
E	mm	1285	1440
	ft	4'11"	5'1"

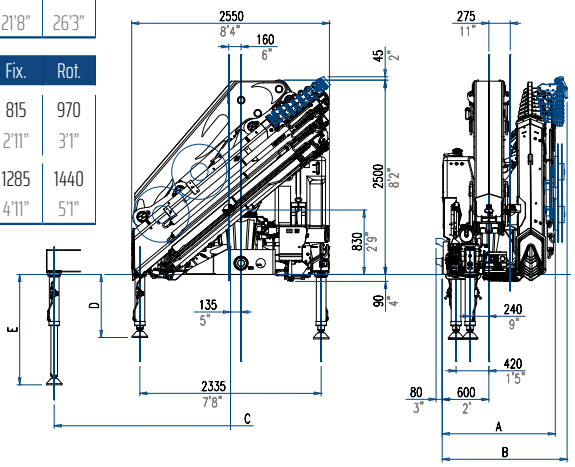

STANDARD CRANES		47524 SP	47525 SP	47526 SP	47527 SP	47528 SP	47529 SP
A	mm	1330	1330	1420	1450	1450	1450
	ft	4'4"	4'4"	4'8"	4'9"	4'9"	4'9"
B	mm	1565	1565	1565	1580	1580	1610
	ft	5'2"	5'2"	5'2"	5'2"	5'2"	5'3"

WITH JIB

kg m | lbs ft

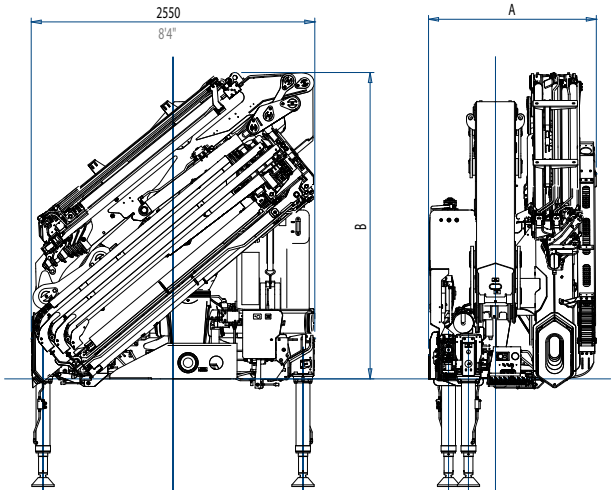

CRANE WITH JIB		47524 SP+J1414.20	47525 SP+J1215.20	47526 SP+J1214.20	47526 SP+J1216.20	47527 SP+J815.20	47528 SP+J614.20
A	mm	1510	1510	1510	1510	1510	1510
	ft	4'11"	4'11"	4'11"	4'11"	4'11"	4'11"
A	mm	1645	1635	1635	1635	1585	1580
	ft	5'5"	5'4"	5'4"	5'4"	5'2"	5'2"
B	mm	2770	2770	2765	2765	2725	2760
	ft	9'1"	9'1"	9'1"	9'1"	8'11"	9'1"