Load Rating Chart

Model TC40127

© Manitex 2000

NOTE: Additional copies of this Load Rating Chart can be purchased from your Manitex Distributor. When ordering, use the part number shown in the bottom left corner of this page.

RANGE DIAGRAM
- FULLY EXTENDED OUTRIGGER CONFIGURATION -

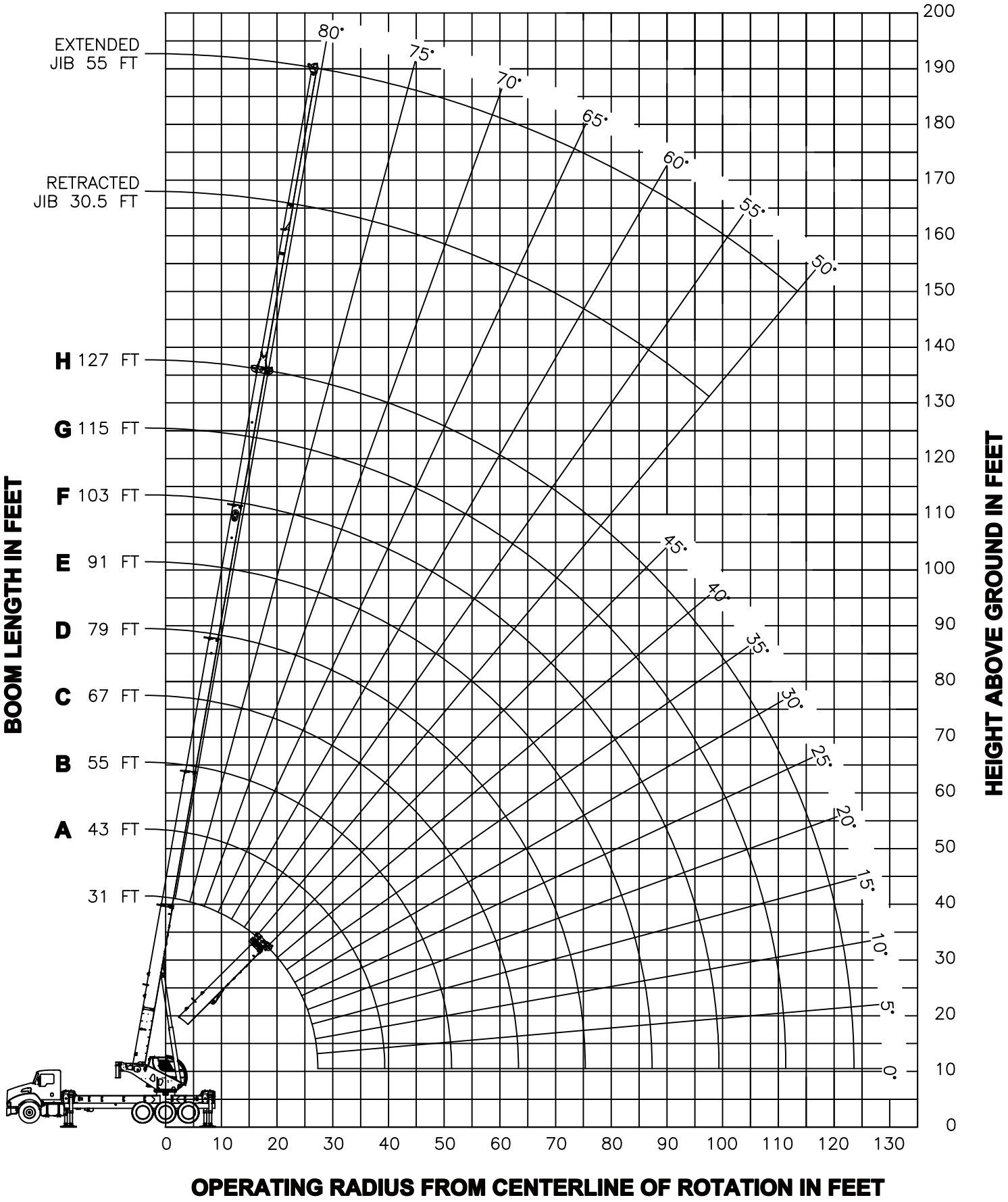

USE THIS CHART <u>ONLY</u> WHEN ALL OUTRIGGERS ARE <u>FULLY</u> <u>EXTENDED</u>

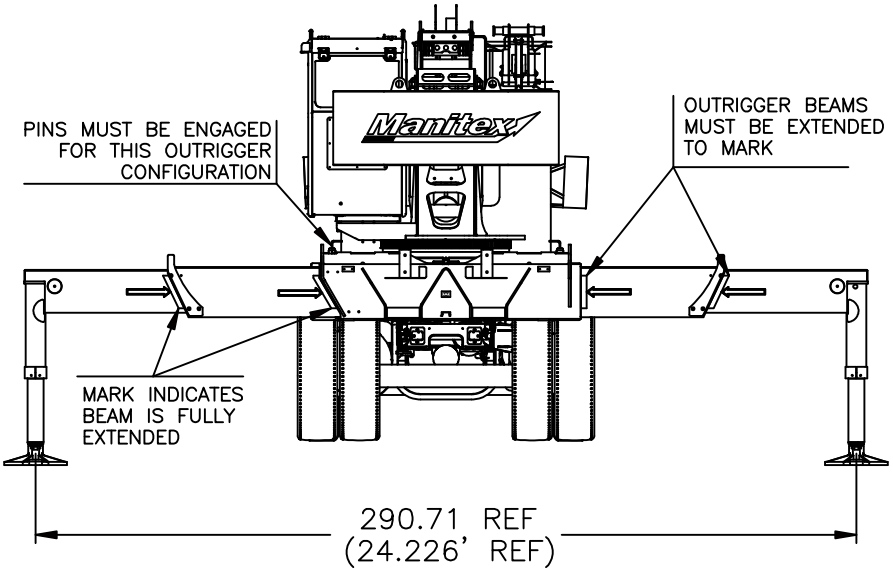

- FULLY EXTENDED OUTRIGGER CONFIGURATION -

MAIN BOOM LMI CODE 3

LOAD RADIUS (FT)	31 FT		43 FT (A)		55 FT (B)		67 FT (C)		79 FT (D)		91 FT (E)		103 FT (F)		115 FT (G)		127 FT (H)		LOAD RADIUS (FT)
	∠	LOAD CAPACITY (LBS)	∠	LOAD CAPACITY (LBS)	∠	LOAD CAPACITY (LBS)	∠	LOAD CAPACITY (LBS)	∠	LOAD CAPACITY (LBS)	∠	LOAD CAPACITY (LBS)	∠	LOAD CAPACITY (LBS)	∠	LOAD CAPACITY (LBS)	∠	LOAD CAPACITY (LBS)	
7	70	80000																	7
8	68	80000																	8
10	64	71920	72	42000	76	42000													10
12	60	60600	69	42000	74	42000													12
15	54	47660	65	42000	70	42000	74	37500	77	27900									15
20	41	34390	57	35030	65	35360	70	33000	73	25180	75	19500	77	17000	78	17000			20
25	23	26200	49	26930	59	27270	65	27460	69	22810	72	17650	74	15570	76	13500	77	10000	25
30			39	21450	53	21800	60	22000	65	20940	68	16250	71	14420	73	12420	75	10000	30
35			26	17470	46	17860	55	18070	61	17060	65	15030	68	13300	70	11420	72	9800	35
40					38	14880	50	15100	57	15230	61	13780	65	12120	68	10540	70	9300	40
45					28	12330	44	12630	52	12810	58	10990	62	11050	65	9550	68	8800	45
50					13	9930	37	10270	47	10450	54	10200	59	8870	62	8870	65	8300	50
55							29	8450	42	8640	50	8760	55	8260	59	8260	63	7800	55
60							18	7000	37	7200	46	7330	52	7410	57	7480	60	7450	60
65									30	6020	41	6160	48	6250	53	6310	57	6360	65
70									21	4940	36	5100	44	5200	50	5270	55	5330	70
75									5	4010	30	4210	40	4320	47	4390	52	4450	75
80											23	3460	36	3570	43	3650	49	3700	80
85											13	2810	31	2940	40	3010	46	3070	85
90													25	2300	36	2340	43	2480	90
95													17	1830	31	1880	39	2000	95
100															26	1560	35	1620	100
105															19	1180	31	1240	105
110															9	830	27	910	110
115																	21	600	115
120																			120
	840 LBS		610 LBS		480 LBS		400 LBS		340 LBS		300 LBS		260 LBS		240 LBS		220 LBS		

DEDUCTIONS FROM MAIN BOOM CAPACITIES FOR STOWED TELESCOPIC JIB

USE THIS CHART <u>ONLY</u> WHEN ALL OUTRIGGERS ARE <u>FULLY</u> <u>EXTENDED</u>

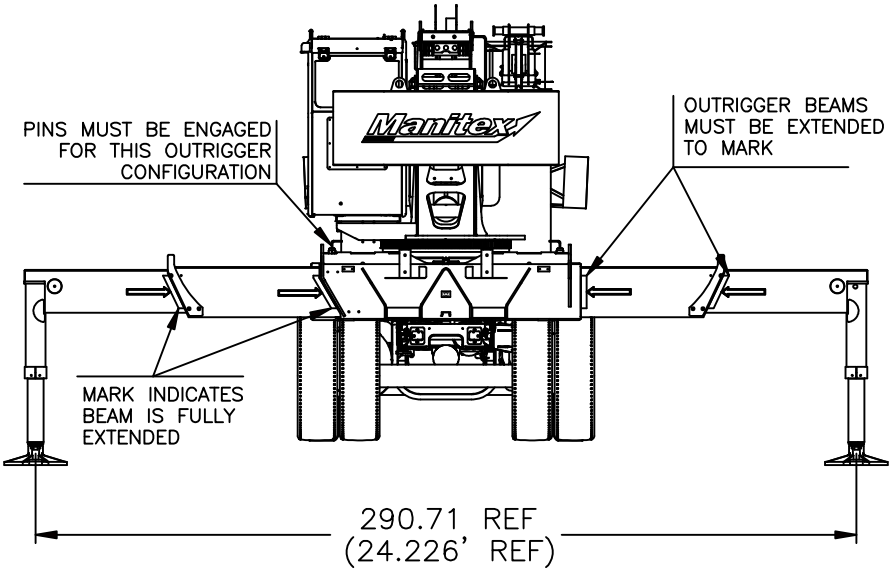

- FULLY EXTENDED OUTRIGGER CONFIGURATION -

JIB LOAD CAPACITIES

LOAD RADIUS (FT) REF	30.5 FT TELE JIB LMI CODE 7		55 FT TELE JIB LMI CODE 13		LOAD RADIUS (FT) REF
	LOADED BOOM ANGLE (DEG)	LOAD CAPACITY (LBS)	LOADED BOOM ANGLE (DEG)	LOAD CAPACITY (LBS)	
15					15
20	79.0	3450			20
25	77.1	3400			25
30	75.3	3320	78.9	2500	30
35	73.4	3190	77.3	2500	35
40	71.5	2910	75.7	2500	40
45	69.5	2770	74.1	2200	45
50	67.6	2570	72.4	2010	50
55	65.6	2420	70.8	1870	55
60	63.6	2270	69.1	1780	60
65	61.6	2130	67.4	1680	65
70	59.5	2010	65.7	1570	70
75	57.3	1910	64.0	1500	75
80	55.2	1630	62.2	1430	80
85	52.9	1230	60.4	1350	85
90			58.6	1250	90
95					95

RANGE DIAGRAM
- INTERMEDIATE OUTRIGGER CONFIGURATION -

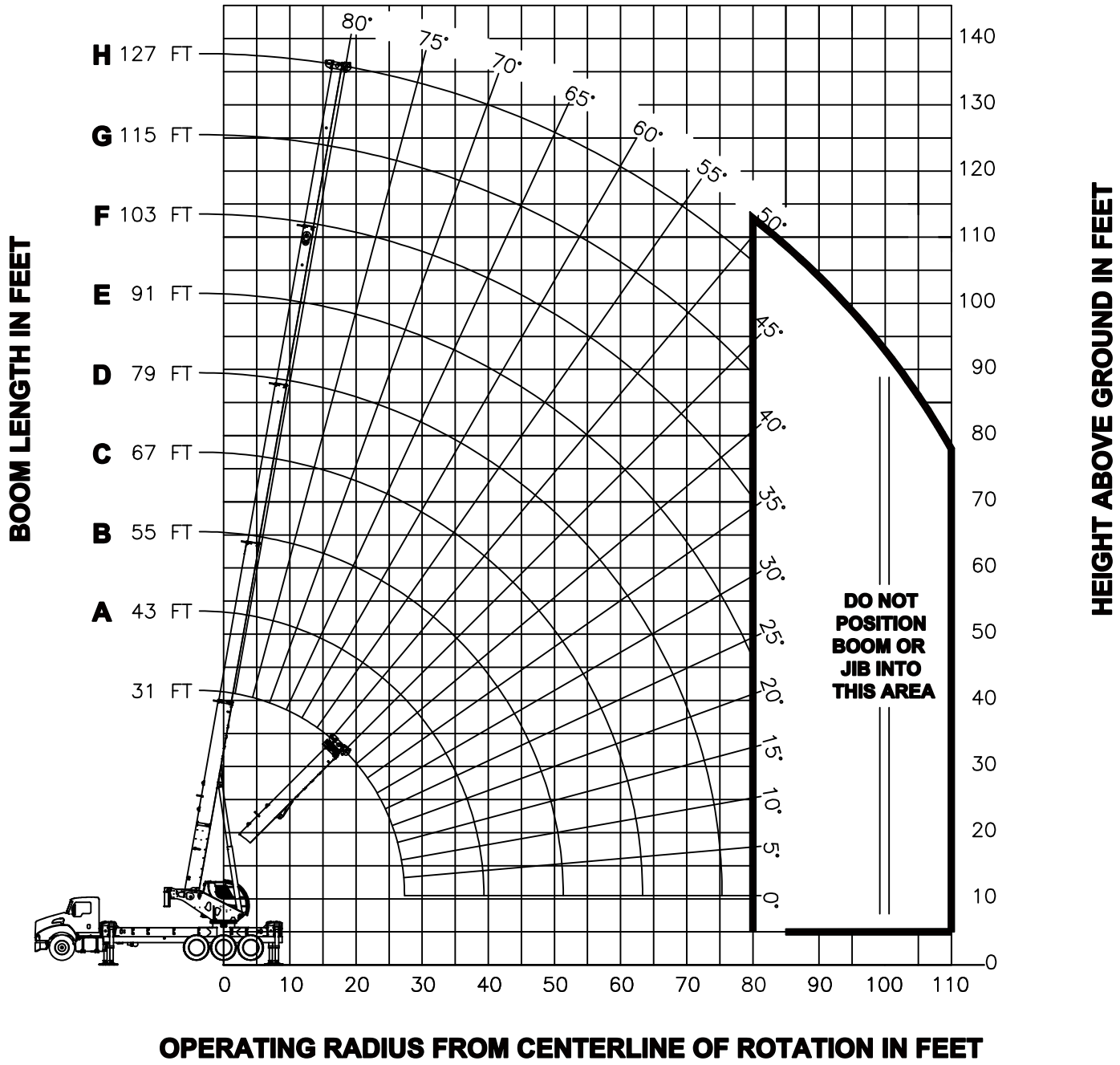

NOTE : LIFTING PERSONNEL WITH CRANE IN THIS OUTRIGGER CONFIGURATION IS STRICTLY PROHIBITED. USE ONLY FULLY EXTENDED OUTRIGGER CONFIGURATION WHEN LIFTING PERSONNEL.

USE THIS CHART <u>ONLY</u> WHEN ALL OUTRIGGERS ARE IN THE <u>INTERMEDIATE POSITION</u>

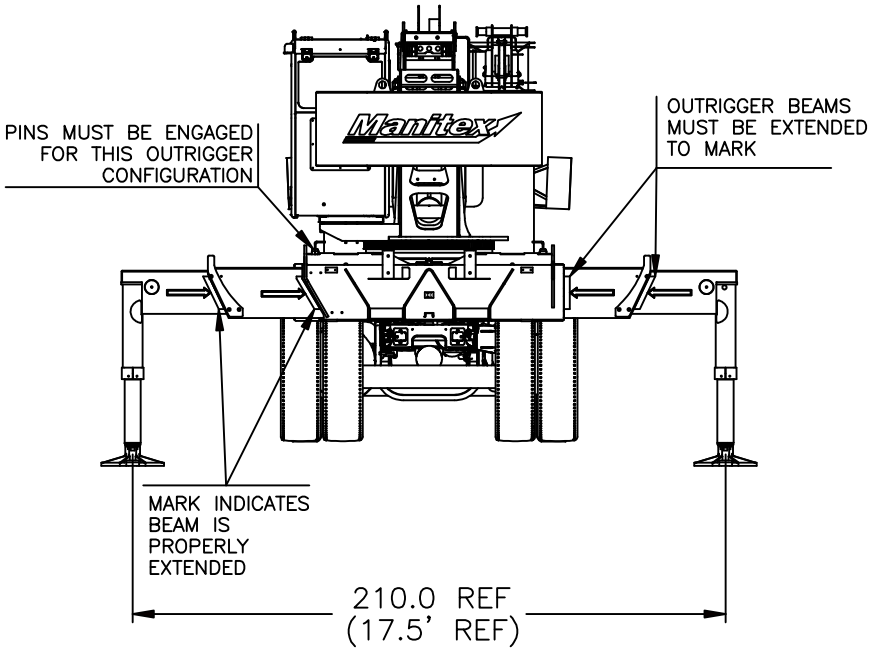

- INTERMEDIATE OUTRIGGER CONFIGURATION -

LOAD RADIUS (FT)	MAIN BOOM LMI CODE 4																		LOAD RADIUS (FT)
	31 FT		43 FT (A)		55 FT (B)		67 FT (C)		79 FT (D)		91 FT (E)		103 FT (F)		115 FT (G)		127 FT (H)		
	∠°	LOAD CAPACITY (LBS)	∠°	LOAD CAPACITY (LBS)	∠°	LOAD CAPACITY (LBS)	∠°	LOAD CAPACITY (LBS)	∠°	LOAD CAPACITY (LBS)	∠°	LOAD CAPACITY (LBS)	∠°	LOAD CAPACITY (LBS)	∠°	LOAD CAPACITY (LBS)	∠°	LOAD CAPACITY (LBS)	
7	70	80000																	7
8	68	80000																	8
10	64	71920	72	42000	76	42000													10
12	60	60600	69	42000	74	42000													12
15	54	47660	65	42000	70	42000	74	37500	77	27900									15
20	41	29780	57	30800	65	31330	70	30970	73	25180	75	19500	77	17000	78	17000			20
25	23	18570	49	19550	59	20010	65	20300	69	19730	72	17650	74	15570	76	13500	77	10000	25
30			39	13570	53	14010	60	14270	65	14450	68	13960	71	12420	73	12420	75	10000	30
35			26	9830	46	10290	55	10540	61	10700	65	10820	68	10910	70	10970	72	9800	35
40					38	7740	50	7990	57	8150	61	8270	65	8350	68	8410	70	8460	40
45					28	5880	44	6150	52	6310	58	6410	62	6490	65	6550	68	6600	45
50					13	4440	37	4740	47	4900	54	5010	59	5090	62	5140	65	5190	50
55							29	3630	42	3800	50	3910	55	3980	59	4040	63	4080	55
60							18	2720	37	2910	46	3020	52	3090	57	3150	60	3190	60
65									30	2170	41	2280	48	2360	53	2420	57	2460	65
70									21	1540	36	1670	45	1750	50	1800	55	1840	70
75									5	980	30	1140	40	1220	47	1280	52	1320	75
80													36	770	43	830	49	870	80
85																			85
90																			90
	840 LBS		610 LBS		480 LBS		400 LBS		340 LBS		300 LBS		260 LBS		240 LBS		220 LBS		

DEDUCTIONS FROM MAIN BOOM CAPACITIES FOR STOWED TELESCOPIC JIB

ALLOWABLE LINE PULL

1 PART LINE	2 PART LINE	3 PART LINE	4 PART LINE	5 PART LINE	6 PART LINE	7 PART LINE	8 PART LINE	9 PART LINE	WARNING
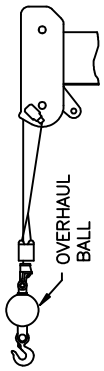	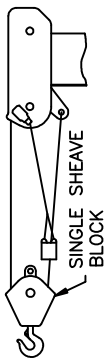	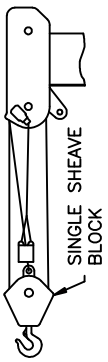	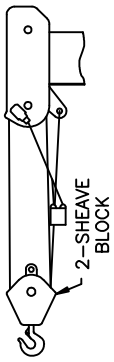	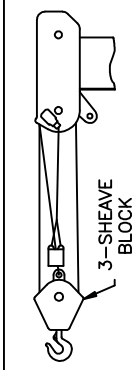	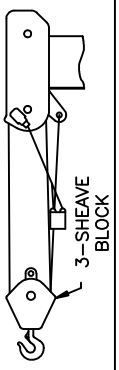	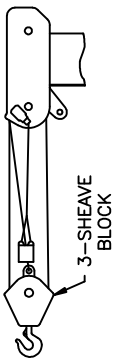	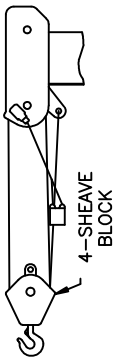	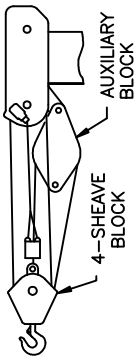	ANTI–TWO–BLOCK SYSTEM MUST BE IN GOOD OPERATING CONDITION BEFORE OPERATING CRANE. REFER TO THE OWNER'S MANUAL. KEEP AT LEAST 3 WRAPS OF LOAD LINE ON THE DRUM AT ALL TIMES.
9500 LBS	19000 LBS	28500 LBS	38000 LBS	47500 LBS	57000 LBS	66500 LBS	76000 LBS	80000 LBS	5/8" ROT RESISTANT (5.0:1 SF) – 47500 LBS MIN BREAKING STRENGTH
10000 LBS	20000 LBS	30000 LBS	40000 LBS	50000 LBS	60000 LBS	70000 LBS	80000 LBS	80000 LBS	5/8" 6 X 25 IWRC (3.5:1 SF) – 35000 LBS MIN BREAKING STRENGTH

AREA OF OPERATION

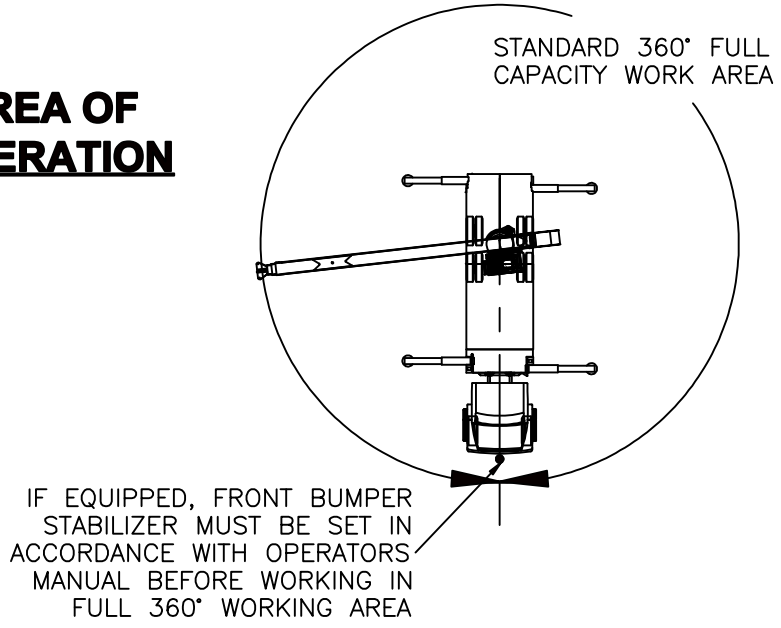

DEDUCTIONS FROM RATED LOADS FOR LOAD HANDLING DEVICES SUPPLIED BY MANITEX

AUXILIARY BLOCK — — —

LMI OPERATING CODES

SETTING	CRANE CONFIGURATION	OUTRIGGER CONFIGURATION
#3	MAIN BOOM	FULLY EXTENDED
#7	TELESCOPIC JIB–RETRACTED	FULLY EXTENDED
#13	TELESCOPIC JIB–EXTENDED	FULLY EXTENDED
#25	PERSONNEL LIFTING PLATFORM ON MAIN BOOM	FULLY EXTENDED
#26	PERSONNEL LIFTING PLATFORM ON TELESCOPIC JIB–RETRACTED	FULLY EXTENDED
#29	PERSONNEL LIFTING PLATFORM ON TELESCOPIC JIB–EXTENDED	FULLY EXTENDED
#4	MAIN BOOM	INTERMEDIATE
#43	MAIN BOOM STOWED JIB	FULLY EXTENDED
#44	MAIN BOOM STOWED JIB	INTERMEDIATE
#46	PERSONNEL LIFTING PLATFORM ON MAIN BOOM STOWED JIB	FULLY EXTENDED

WARNING

1. THE OPERATOR MUST READ AND UNDERSTAND THE OWNER'S MANUAL BEFORE OPERATING THIS CRANE.

2. POSITIONING OR OPERATION OF CRANE BEYOND AREAS SHOWN ON THIS CHART IS NOT INTENDED OR APPROVED EXCEPT WHERE SPECIFIED IN OWNER'S MANUAL.

3. LOADED BOOM ANGLES AT SPECIFIED BOOM LENGTHS GIVE ONLY AN APPROXIMATION OF THE OPERATING RADIUS. THE BOOM ANGLE BEFORE LOADING SHOULD BE GREATER TO ACCOUNT FOR DEFLECTIONS. DO NOT EXCEED THE OPERATING RADIUS FOR RATED LOADS.

4. THE OPERATING RADIUS SHOWN IN THE JIB RATING CHART IS FOR FULLY EXTENDED BOOM ONLY. WHEN BOOM IS NOT FULLY EXTENDED, USE ONLY LOADED BOOM ANGLE TO DETERMINE LOAD RATING OF JIB.

5. FOR BOOM ANGLES NOT SHOWN ON JIB LOAD RATING CHART, USE RATING OF NEXT LOWER BOOM ANGLE.

6. FOR BOOM LENGTHS NOT SHOWN, USE RATING OF NEXT SHORTER OR LONGER BOOM LENGTH, WHICHEVER IS LESS. FOR RADII NOT SHOWN, USE RATING OF NEXT LONGER RADIUS.

7. CRANE LOAD RATINGS ON OUTRIGGERS ARE BASED ON FREELY SUSPENDED LOADS WITH THE MACHINE LEVELED AND STANDING ON A FIRM UNIFORM SUPPORTING SURFACE. NO ATTEMPT SHALL BE MADE TO MOVE A LOAD HORIZONTALLY ON THE GROUND IN ANY DIRECTION.

WARNING (CONTINUED)

8. PRACTICAL WORKING LOADS DEPEND ON SUPPORTING SURFACE, WIND, AND OTHER FACTORS AFFECTING STABILITY SUCH AS HAZARDOUS SURROUNDINGS, EXPERIENCE OF PERSONNEL, AND PROPER HANDLING, ALL OF WHICH MUST BE TAKEN INTO ACCOUNT BY THE OPERATOR.

9. THE MAXIMUM LOAD WHICH MAY BE TELESCOPED IS LIMITED BY HYDRAULIC PRESSURE, BOOM ANGLE, AND BOOM LUBRICATION. IT IS SAFE TO ATTEMPT TO TELESCOPE ANY LOAD WITHIN THE LIMITS OF THE LOAD RATING CHART.

10. LIFTING OFF THE MAIN BOOM POINT WHILE THE SWING AROUND JIB IS ERECTED IS NOT INTENDED OR APPROVED.

INFORMATION

1. DEDUCTIONS MUST BE MADE FROM RATED LOADS FOR STOWED JIB, OPTIONAL ATTACHMENTS, HOOKS, AND LOAD BLOCKS (SEE DEDUCTION CHART). WEIGHTS OF SLINGS AND ALL OTHER LOAD HANDLING DEVICES SHALL BE CONSIDERED A PART OF THE LOAD.

2. LOAD RATINGS ABOVE THE HEAVY LINE ARE STRUCTURALLY LIMITED CAPACITIES. LOAD RATINGS BELOW THE HEAVY LINE ARE STABILITY LIMITED CAPACITIES AND DO NOT EXCEED 85% OF TIPPING.

DEFINITIONS

1. OPERATING RADIUS IS THE HORIZONTAL DISTANCE FROM THE AXIS OF ROTATION TO THE CENTER OF THE VERTICAL HOIST LINE OR TACKLE WITH LOAD APPLIED.

2. LOADED BOOM ANGLE AS SHOWN IN THE COLUMN HEADED BY ∠°, IS THE INCLUDED ANGLE BETWEEN THE HORIZONTAL AND LONGITUDINAL AXES OF THE BOOM BASE AFTER LIFTING RATED LOAD AT RATED RADIUS.