THE 2892C SERIES TELESCOPIC CRANE

Maximize use and value

The CM280 series strikes the perfect balance between the three things customers tell us they care about most: features, cost and ease of use.

The CM280 offers:

- A Greer Insight™ load moment indicator, the industry's only monitoring display that offers the feature-rich capabilities and high-resolution VGA graphics to help operators work safer and smarter
- Self-lubricating boom slider pads, to minimize maintenance costs
- A compact size; properly equipped, the unit is just 38' 6" long

Other features include:

- 28 –ton Capacity at 5 ft. radius
- 92 ft. 4-section proportional boom
- Optional 26 ft. fixed jib
- Optional 26 ft./46 ft. telescopic jib
- Wired anti-two block with lockout ATB
- Removable boom rest

USER-FRIENDLY CONTROLS

Dual operator stations are equipped with engine start/stop, foot throttle, signal horn, boom angle indicator, load chart, bubble level and range diagram.

OUTRIGGER DEPLOYMENT

Equipped with double-acting hydraulic cylinders, large pivoting pads and audible alerts when outriggers/stabilizers are in motion.

TWO-SPEED PLANETARY HOIST

The two-speed planetary hoist lets you change line speed on the fly. Grooved drum and tapered flanges minimize rope stacking to increase productivity and minimize downtime.

INCREASE PROFITABILITY

The versatile CM280 series, designed to be used with a commercial carrier, helps both owners and operators make the most of their investment.

- Travel to and between jobs at highway speed.
- Ride in comfort with a carrier suspension designed for highway driving.
- Get repairs done quickly and by qualified technicians at commercial truck centers.

2892C A-FRAME OUTRIGGERS

2892C Model Dimensions

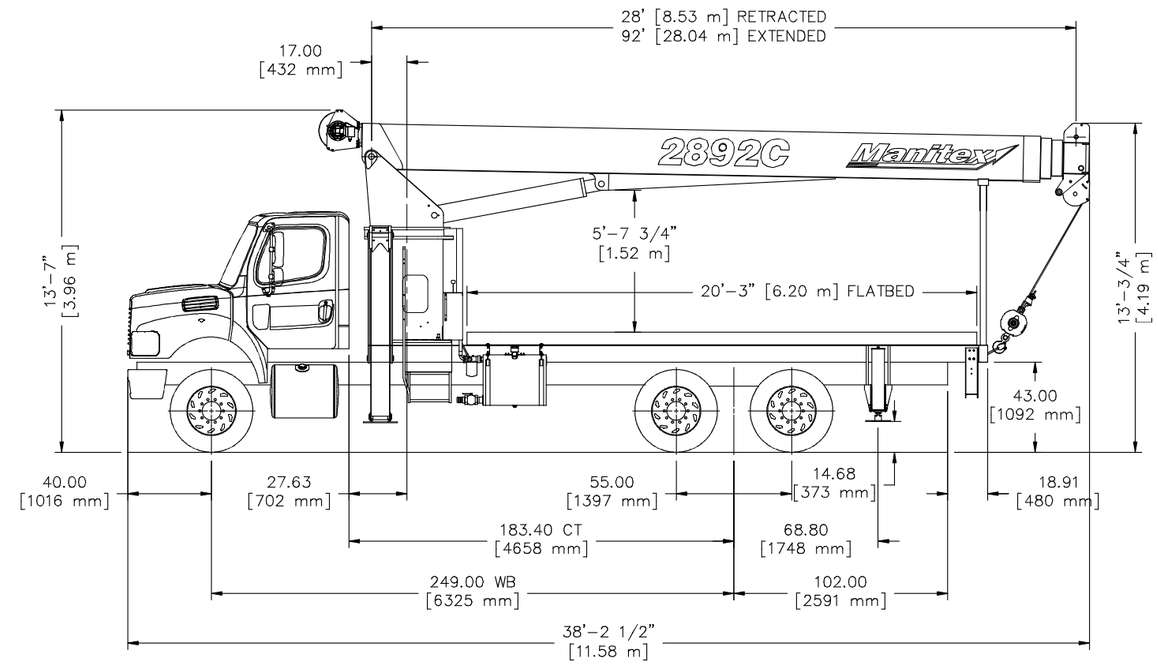

CRANE WEIGHT

Total Crane standard A-Frame outriggers	20,465 lb (9,376 kg)
Flatbed 20'	1,720 lb (780 kg)
Flatbed 22'	1,890 lb (857 kg)
Tele Jib	1,220 lb (553 kg)
Fixed Jib	832 lb (377 kg)

CHASSIS DATA

Wheel Base (WB)	249 in. (6,3mm)
Cab to Tandem (CT)	180 in. (4,5 mm)
After Frame (AF)	102 in. (2,6 mm)
Nominal frame width	34 in. (.86 mm)
Frame Section Modulus at 180/360° area of operation*	28 in.^{3} (491.6 cm^3) 110,000 psi (758,422 kPa)

* Frame selection modulus at 360° area of operation requires front bumper stabilizer.

TRUCK AXLE WEIGHT

Front Axle Gross Weight Rating	16,000 lbs. (7,257 kg)
Rear Axle Gross Weight Rating	34,000 lbs. (15,422 kg)
Minimum truck axle weight - Front**	8,500 lbs. (3,856 kg)
Minimum truck axle weight - Back**	8,150 lbs. (3,697 kg)

** Minimum chassis weight is required to meet 85% stability requirements. Chassis data is general - not for engineering. Some dimensions depend on truck selection.

Notes: Additional axles required for federal bridge legal configuration - consult Manitex. Manitex highly recommends addition of a front stabilizer and may be required on some installations - consult Manitex.

Data published herein is intended as a guide only. Crane operation is subject to machine specific load charts and information.

2892C OUT & DOWN OUTRIGGERS

2892C Model Dimensions

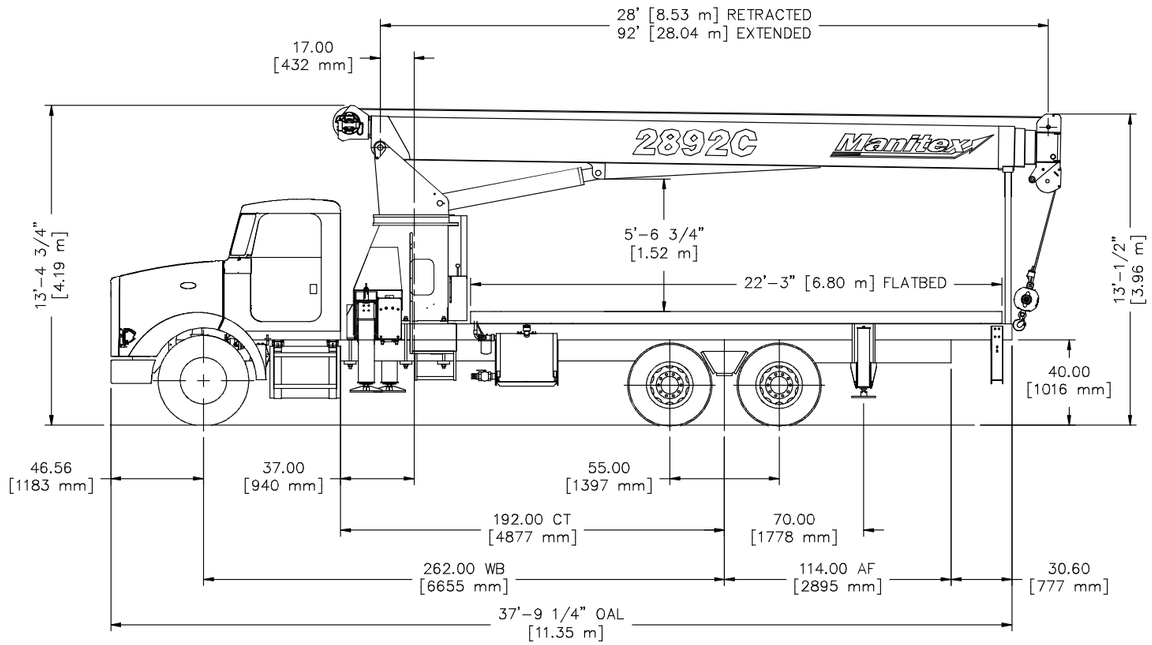

CRANE WEIGHT

Total Crane Out & Down outriggers	21,625 lb (9,902 kg)
Flatbed 20'	1,720 lb (780 kg)
Flatbed 22'	1,890 lb (857 kg)
Tele Jib	1,220 lb (553 kg)
Fixed Jib	832 lb (377 kg)

CHASSIS DATA

Wheel Base (WB)	262 in. (6,6mm)
Cab to Tandem (CT)	192 in. (4,8 mm)
After Frame (AF)	114 in. (2,8 mm)
Nominal frame width	34 in. (.86 mm)
Frame Section Modulus at 180/360° area of operation*	28 in.^{3} (491.6 cm^3) 110,000 psi (758,422 kPa)

TRUCK AXLE WEIGHT

Front Axle Gross Weight Rating	16,000 lbs. (7,257 kg)
Rear Axle Gross Weight Rating	34,000 lbs. (15,422 kg)
Minimum truck axle weight - Front**	8,500 lbs. (3,856 kg)
Minimum truck axle weight - Back**	8,150 lbs. (3,697 kg)

** Minimum chassis weight is required to meet 85% stability requirements. Chassis data is general - not for engineering. Some dimensions depend on truck selection.

Notes: Additional axles required for federal bridge legal configuration - consult Manitex. Manitex highly recommends addition of a front stabilizer and may be required on some installations - consult Manitex.

* Frame selection modulus at 360° area of operation requires front bumper stabilizer.

Data published herein is intended as a guide only. Crane operation is subject to machine specific load charts and information.

2892C OUTRIGGER REAR

2892C Rear Dimensions for A-Frame Outriggers

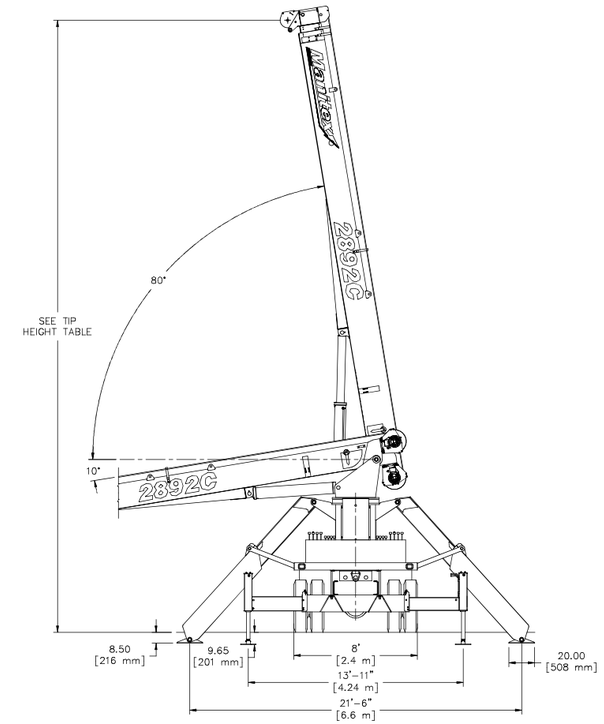

2892C Rear Dimensions for Out & Down Outriggers

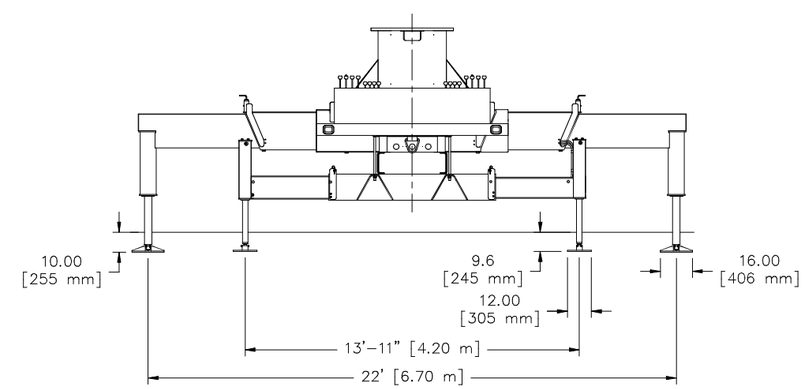

Data published herein is intended as a guide only. Crane operation is subject to machine specific load charts and information.