DIMENSIONS

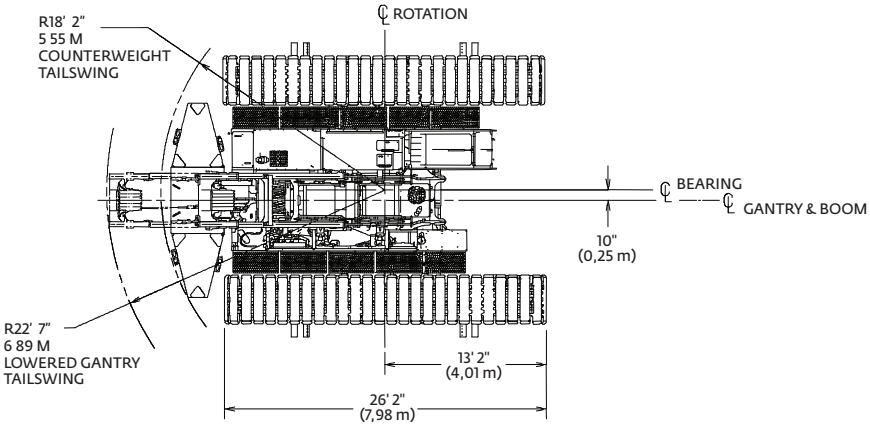
R18' 2"
5 55 M
COUNTERWEIGHT
TAILSWING
℄ ROTATION
℄ BEARING
℄ GANTRY & BOOM
10"
(0,25 m)
R22' 7"
6 89 M
LOWERED GANTRY
TAILSWING
13' 2"
(4,01 m)
26' 2"
(7,98 m)

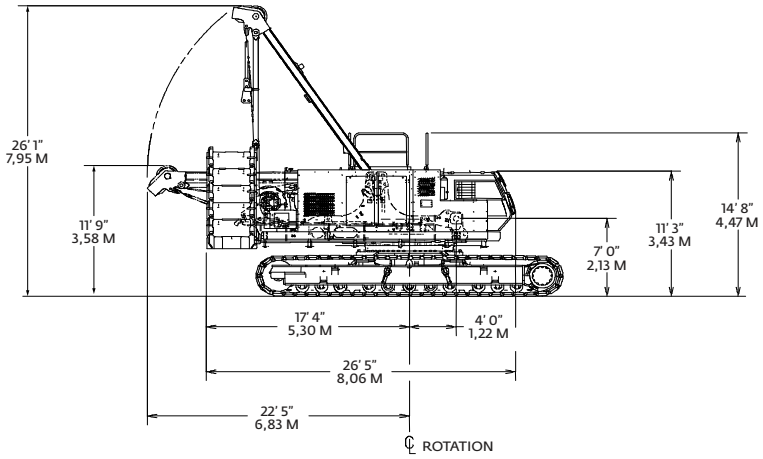
26' 1"
7,95 M
11' 9"
3,58 M
14' 8"
4,47 M
11' 3"
3,43 M
7' 0"
2,13 M
17' 4"
5,30 M
4' 0"
1,22 M
26' 5"
8,06 M
22' 5"
6,83 M
℄ ROTATION

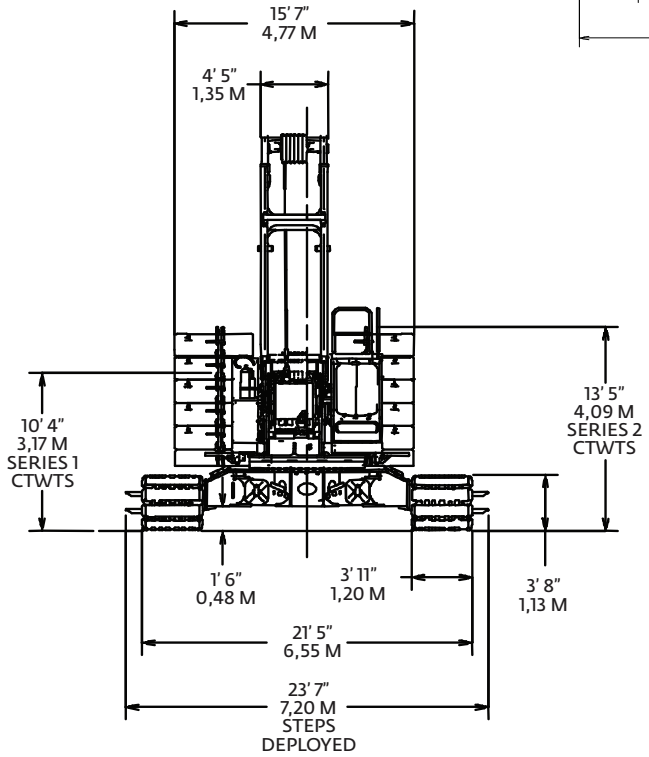
15' 7"
4,77 M
4' 5"
1,35 M
10' 4"
3,17 M
SERIES 1
CTWTS
13' 5"
4,09 M
SERIES 2
CTWTS
1' 6"
0,48 M
3' 11"
1,20 M
3' 8"
1,13 M
21' 5"
6,55 M
23' 7"
7,20 M
STEPS
DEPLOYED