Load curves

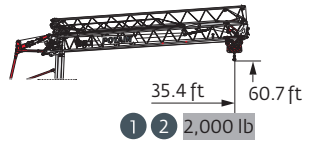

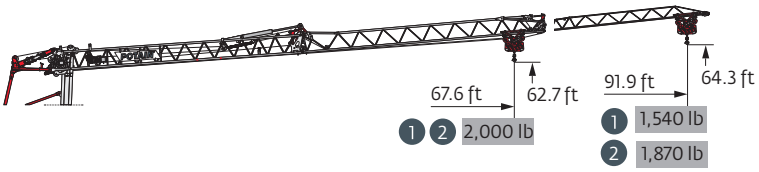

92 ft

	8.2 ►	35.4	ft
1		2,000	lb
2		2,000	lb

	8.2 ►	75	79	82	85	87.3	89	91.9	ft
1		2,000	1,880	1,780	1,700	-	1,620	1,540	lb
2		2,000					1,960	1,870	lb

68 ft

	8.2 ►	35.4	ft
1		2,000	lb
2		2,000	lb

	8.2 ►	67.6	ft
		2,000	lb
		2,000	lb

92 ft

	8.2 ►	69.6	ft
1		2,000	lb
2		2,000	lb

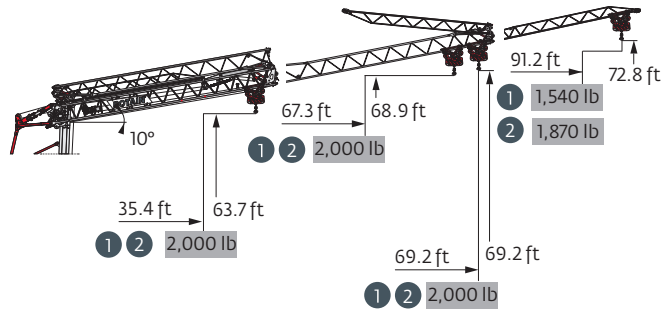

92 ft

	8.2 ►	74.5	79	82	85	86.7	89	91.2	ft
1		2,000	1,860	1,770	1,680	-	1,600	1,540	lb
2		2,000					1,940	1,870	lb

68 ft

	8.2 ►	67.3	ft
1		2,000	lb
2		2,000	lb

92 ft

	8.2 ►	69.2	ft
1		2,000	lb
2		2,000	lb

92 ft
68 ft

	8.2 ►	35.4	ft
1		2,000	lb
2		2,000	lb

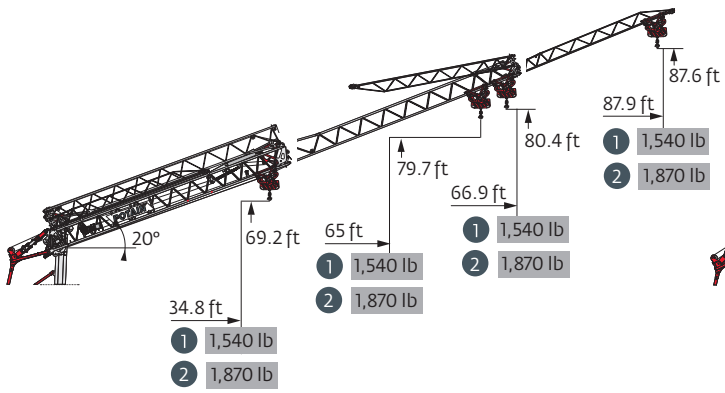

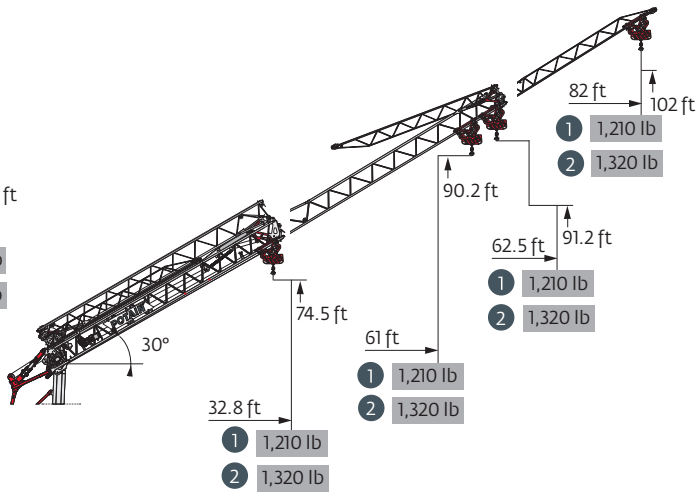

Hup M 28-22 A 2,000 lbs