TADANO

TECHNICAL DATA | IMPERIAL

eGR-1000XLL-1

100 US TON MAX. CRANE CAPACITY

Form NO. eGR-1000-1-00201/US-02

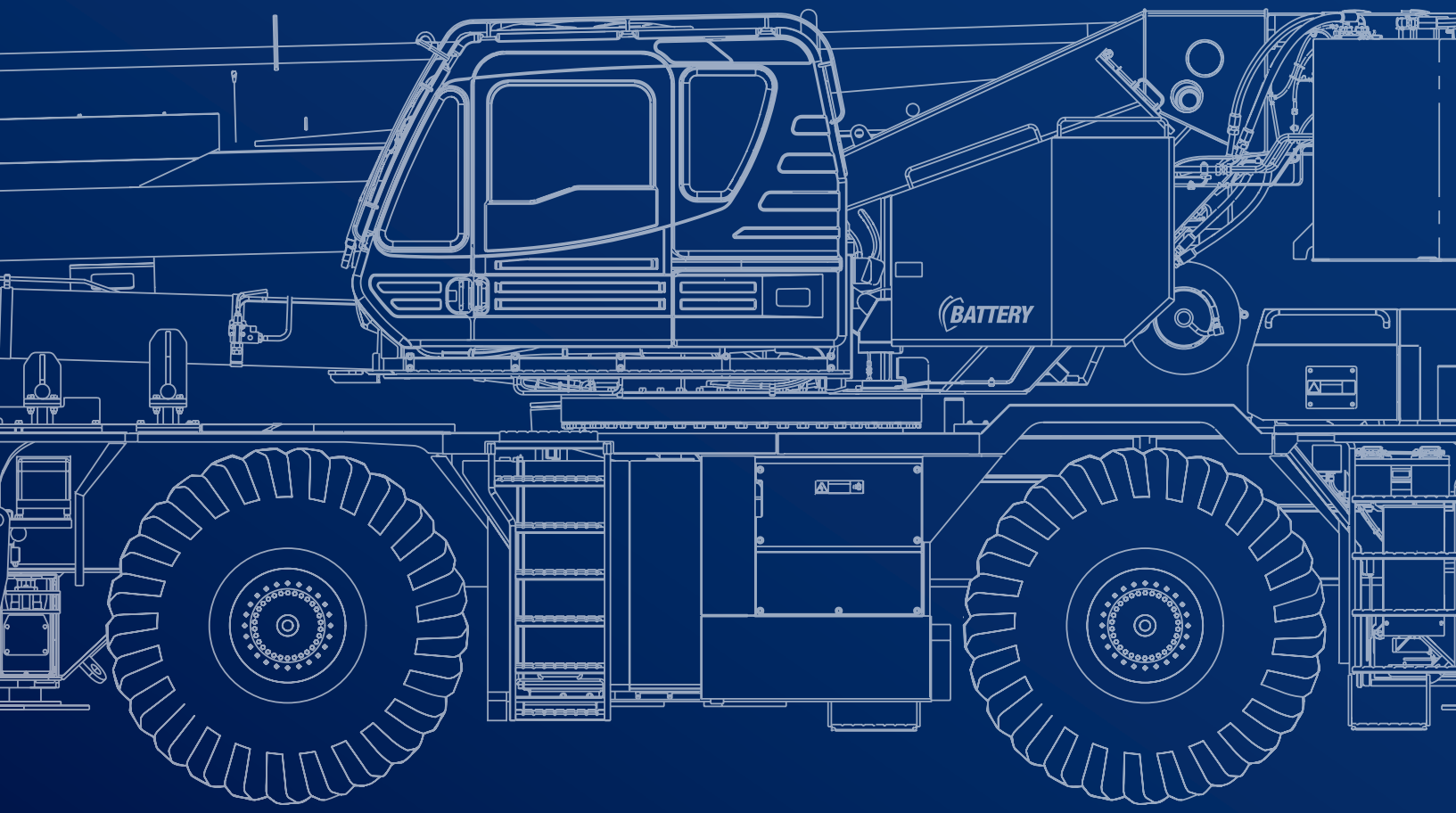

September 2024. Unless otherwise specified, all information in this brochure refers to a standard crane equipment, and it is intended as general information only. No liability is assumed. Errors reserved. Product specifications and prices are subject to changes without notice. The photographs and/or drawings in this brochure are for illustrative purposes only. For correct and safe crane operation, the original operating manual and lifting capacity charts are essential. Failure to follow the corresponding Operator's Manual when using our equipment or failure to otherwise act responsibly may result in property damage, serious injury or death. The sole warranty applicable with respect to our equipment is the standard warranty as per general terms and conditions of sales and service (ask your local Tadano dealer for details), and Tadano makes no other warranty, express or implied. All rights reserved. Any use of the trademarks, logos, brand names and model names used herein is prohibited.

© Tadano Ltd. 2024

Contents

Specifications 5

Vehicle dimensions 6-7
General dimensions 7
Smart Counterweight 8

Off-road driving 9

Axle weight distribution chart 10
Speeds and gradeability 10
Steering 10

Operation 11

Main boom 12
Slewing 12
Winch 12
Line speeds and pulls 13
Drum wire rope capacities 13
Drum dimensions 13
Main boom 14-23
Jib 24-35
Warning and Operating Instructions for Lifting Capacity 36
Warning and Operating Instructions for on Rubber Lifting Capacities 37
Notes for Load Moment Indicator (AML-E2) 37

Technical Description 39

Crane specifications 40-41
Carrier specifications 41
Standard equipment 42-43
Optional equipment 43
Charging methods / Charging power 43

Key

- Counterweight
- Lifting capacities on outriggers · 360°
- Radius
- Main boom
- Main boom length
- Jib length
- On rubber
- Tires
- Hook block
- Winch
- Travel speed
- Gradeability
- Working speeds
- Rope
- Base jib
- Top jib
- Boom telescoping
- Boom elevation
- Jib angle
- Jib radius
- Slewing
- Max. line pull
- Rope diameter
- Rope length
- Hook block
- Number of parts of line
- Line pulls available
- Base machine
- Gross vehicle weight
- Weight on front axle
- Weight on rear axle
- Wire rope layer
- Total wire rope
- Smart Chart
- Smart Counterweight

SPECIFICATIONS

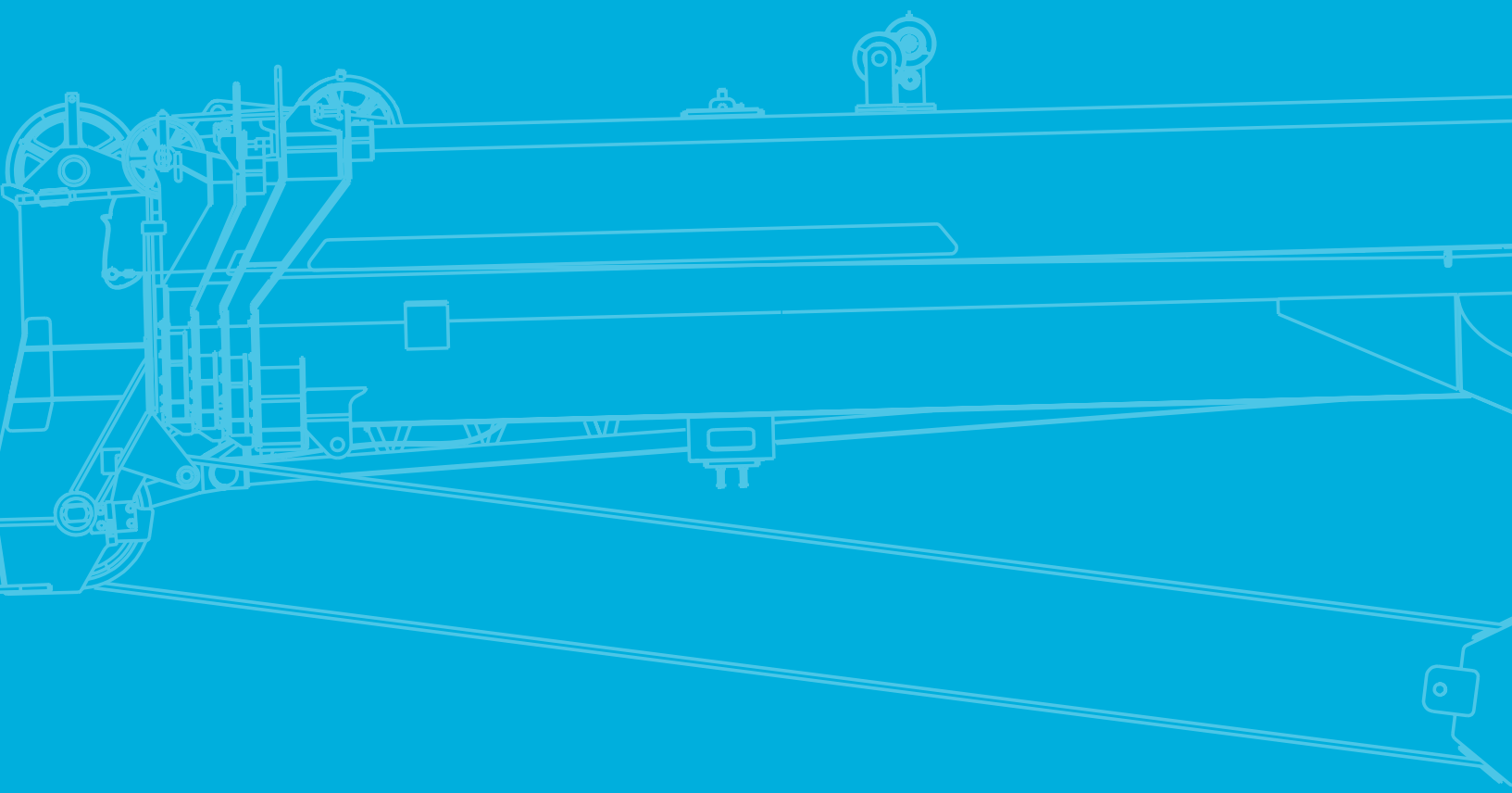

Specifications

Vehicle dimensions

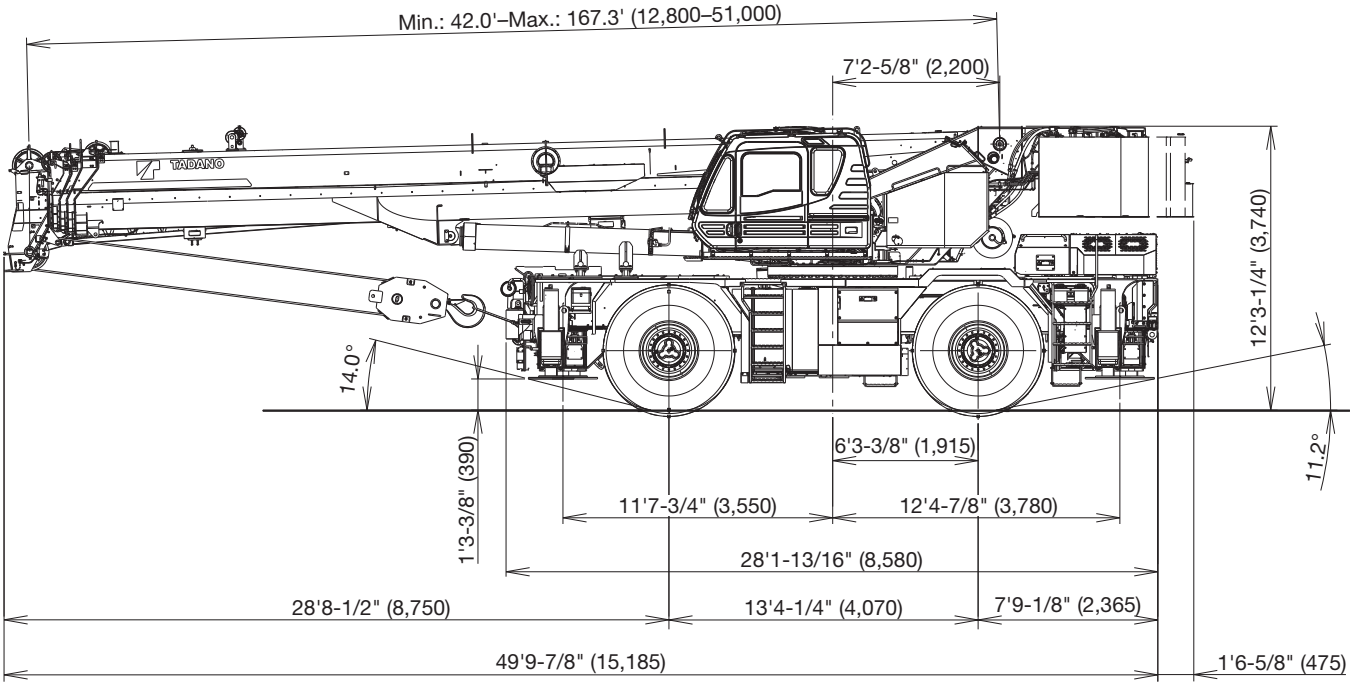

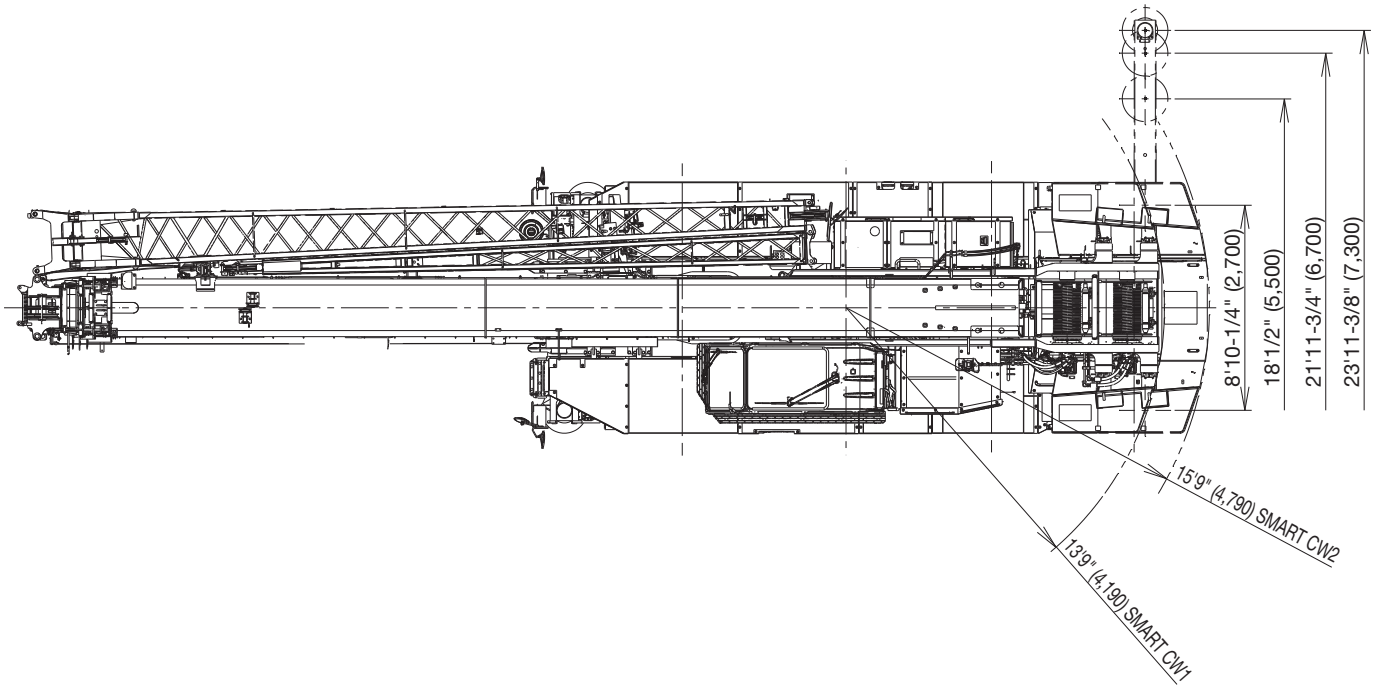

Dimension is with boom angle at -1.5 degree.
( ) Reference dimensions in mm.

Specifications

Vehicle dimensions

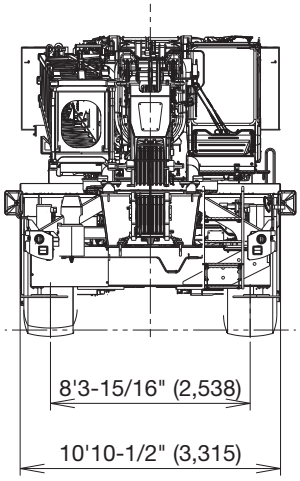

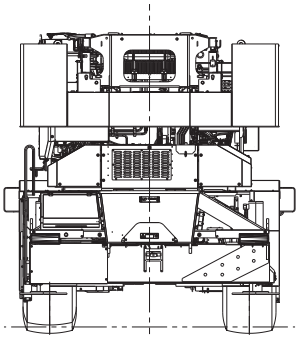

General dimensions

Overall length	approx. 49‘ 9-7/8“ (15.185)
Overall width	approx. 10‘ 10-1/2“ (3.315)
Overall height	approx. 12‘ 3-1/4“ (3.740)
4 wheel steer*	22‘ 11-9/16“ (7.0)
2 wheel steer*	36‘ 8-15/16“ (11.2)

* Turning radius (26.5 R25☆☆ tires)

Specifications

Smart Counterweight

You can increase the capacity by changing the mounting position of the counterweight.

SMART CW 1 status

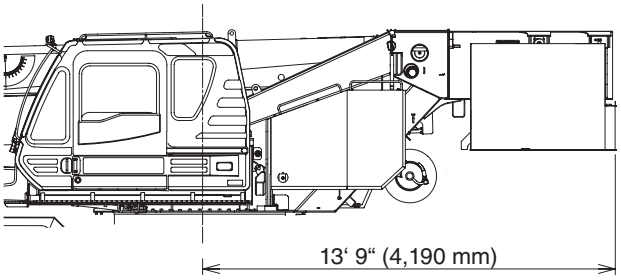

SMART CW 1:
Counterweight is mounted at the front.

SMART CW 2 status

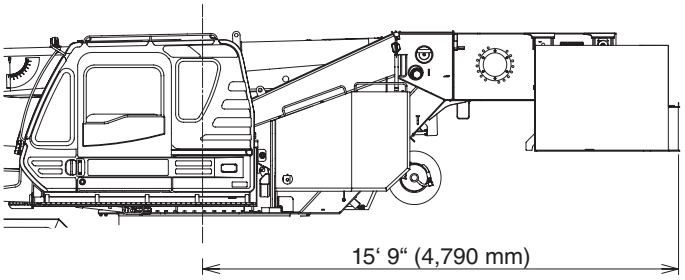

SMART CW 2:
Counterweight is mounted at the rear.

TECHNICAL DATA FOR OFF-ROAD DRIVING

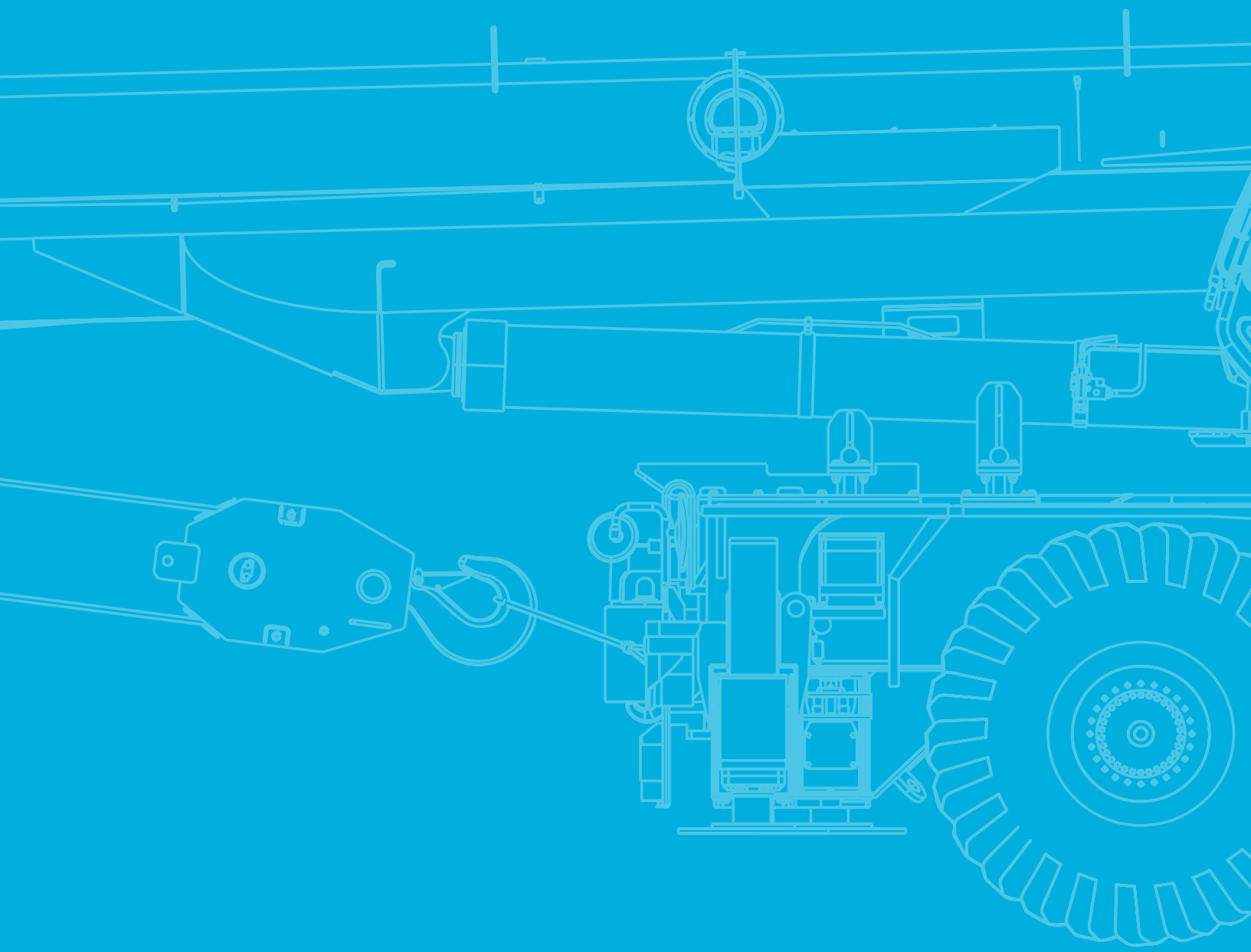

Off-road driving

Axle weight distribution chart	GVW		
	129,000 lb (58,500 kg)	64,700 lb (29,340 kg)	64,300 lb (29,160 kg)
Remove:			
7.3 ton (6.6 metric ton)	-360 lb (-165 kg)	-550 lb (-251 kg)	190 lb (86 kg)
100 ton (90.7 metric ton)	-1,900 lb (-850 kg)	-3,460 lb (-1,571 kg)	1,590 lb (721 kg)
Top jib	-740 lb (-336 kg)	-1,180 lb (-534 kg)	440 lb (198 kg)
Base jib	-1,910 lb (-867 kg)	-4,160 lb (-1,886 kg)	2,250 lb (1,019 kg)
Removable counterweight	-24,700 lb (-11,200 kg)	9,470 lb (4,296 kg)	-34,160 lb (-15,496 kg)

Speeds and gradeability	26.5 R25☆☆
%	40 % in short time 20 % continuously
	11 mph (18 km/h)

Steering	
	4 wheel steer
	2 wheel steer

TECHNICAL DATA FOR OPERATION

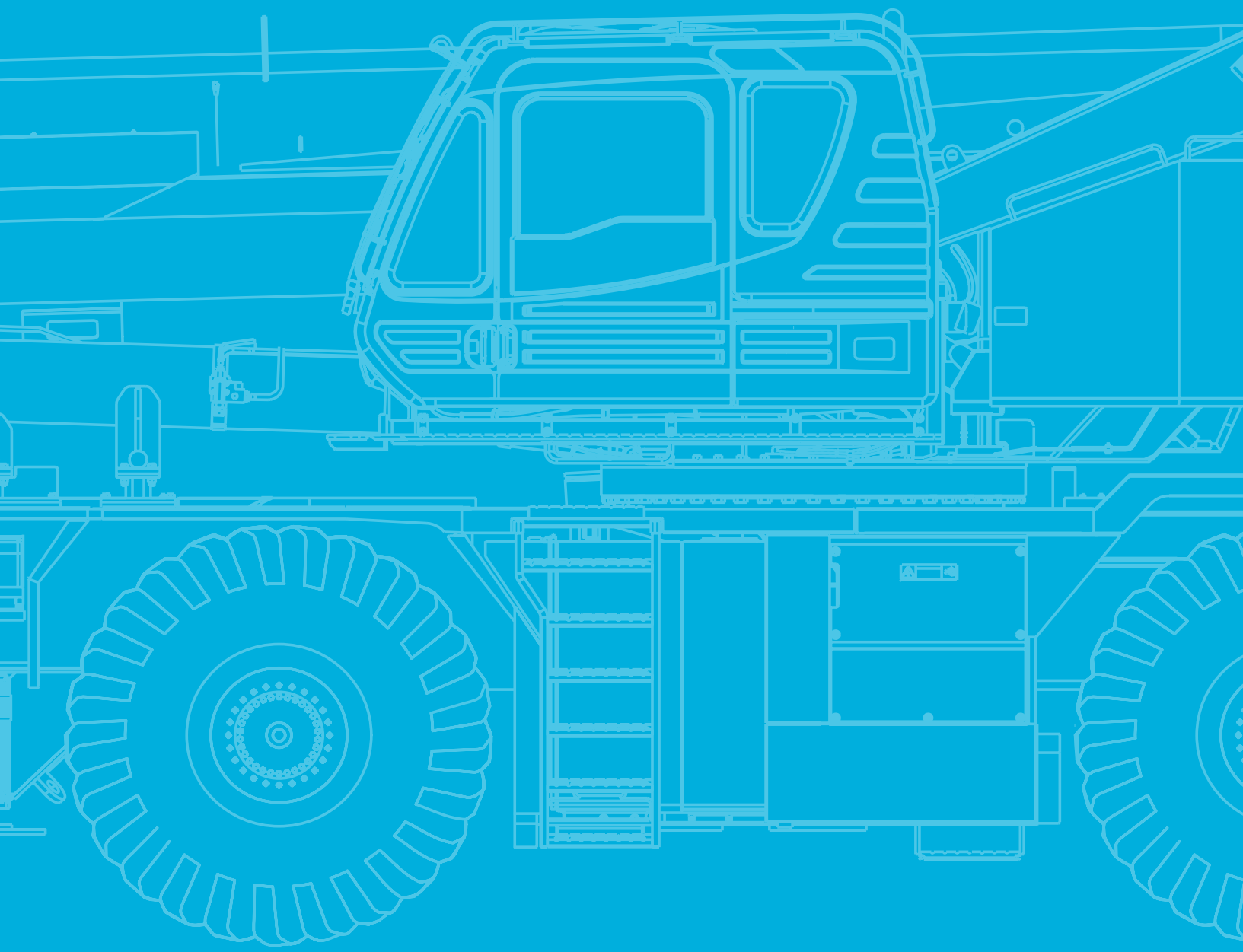

Operation

Main boom			
	approx. 170 s (42.0 ft -167.3 ft (12.8 m - 51.0 m))		-1.5°– 80.5° approx. 46 s (20°– 60°)

Slewing	
	1.5 min^{-1}

Winch			
	lb		
1	14,600 lb (6,600 kg)	3/4“ (19 mm)	935‘ (285 m)
2	14,600 lb (6,600 kg)	3/4“ (19 mm)	482‘ (147 m)

Operation

Line speeds and pulls

Main or auxiliary hoist - 14‘-1/4“ (0.362 m) drum

N	low	high[1]	low	high[2]
1	278 ft/min. (84 m/min)	387 ft/min. (118 m/min)	20,000 lb (9,090 kgf)	14,400 lb (6,520 kgf)
2	302 ft/min. (92 m/min)	421 ft/min. (128 m/min)	18,100 lb (8,230 kgf)	13,000 lb (5,900 kgf)
3	327 ft/min. (99 m/min)	456 ft/min. (139 m/min)	16,600 lb (7,520 kgf)	11,900 lb (5,390 kgf)
4	352 ft/min. (107 m/min)	491 ft/min. (149 m/min)	15,300 lb (6,920 kgf)	10,900 lb (4,960 kgf)
5	377 ft/min. (115 m/min)	526 ft/min. (160 m/min)	14,100 lb (6,410 kgf)	10,100 lb (4,600 kgf)
6	402 ft/min. (122 m/min)	560 ft/min. (170 m/min)	13,200 lb (5,970 kgf)	9,400 lb (4,280 kgf)
7[3]	427 ft/min. (130 m/min)	595 ft/min. (181 m/min)	12,300 lb (5,590 kgf)	8,800 lb (4,010 kgf)

Maximum permissible line pull wire strength 14,600 lb (6,600 kg).

1) Line speed based only on hook block, not loaded.

2) Developed by machinery with each layer of wire rope, but not based on rope strength or other limitations in machinery or equipment.

3) Seventh layer of wire rope are not recommended for hoisting operations.

Drum wire rope capacities

Main and auxiliary drum grooved lagging 3/4“ (19 mm) wire rope

N		Σ
1	128.0 ft (39.0 m)	128.0 ft (39.0 m)
2	139.4 ft (42.5 m)	267.4 ft (81.5 m)
3	150.9 ft (46.0 m)	418.3 ft (127.5 m)
4	162.1 ft (49.4 m)	580.4 ft (176.9 m)
5	173.9 ft (53.0 m)	754.3 ft (229.9 m)
6	185.4 ft (56.5 m)	939.6 ft (286.4 m)
7	196.9 ft (60.0 m)	1136.5 ft (346.4 m)

Drum dimensions

Root diameter	14-1/4“ (362 mm)
Length	26-13/16“ (681 mm)
Flange diameter	25-7/8“ (657 mm)

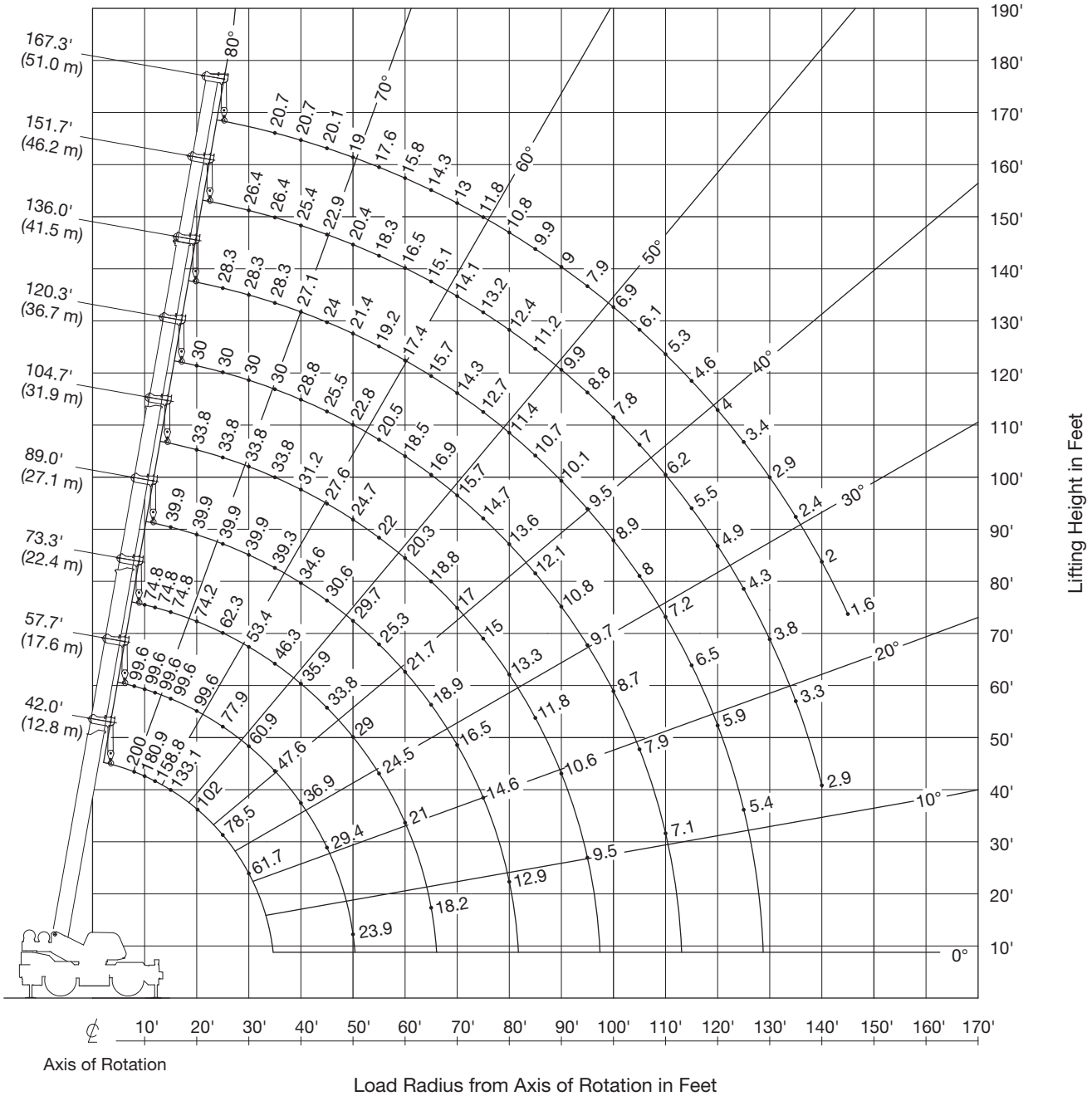

BOOM

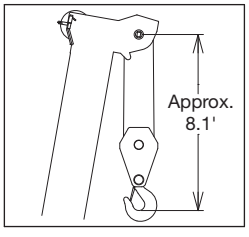

SINGLE TOP

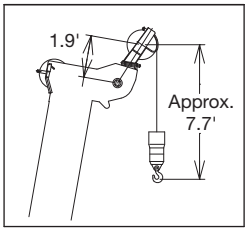

NOTE:
Boom geometry shown is for unloaded condition and machine standing level on firm supporting surface.
Boom deflection and subsequent radius and boom angle change must be accounted for when applying load to hook.
When boom length is same as telescoping mode 1 and 2, it show large load.

Fully extended – 360° – SMART CW1

24,700 lb (11.2 t) 23‘ 11-3/8“ (7.3 m) spread 360°

ft	42.0‘ (12.8 m)	57.7‘ (17.6 m)	73.3‘ (22.4 m)	73.3‘ (22.4 m)	89.0‘ (27.1 m)	89.0‘ (27.1 m)	104.7‘ (31.9 m)	104.7‘ (31.9 m)	120.3‘ (36.7 m)	120.3‘ (36.7 m)	136.0‘ (41.5 m)	136.0‘ (41.5 m)	151.7‘ (46.2 m)	151.7‘ (46.2 m)	167.3‘ (51 m)	ft
								lb								
8	200,000	99,600	-	-	-	-	-	-	-	-	-	-	-	-	-	8
10	180,900	99,600	74,800	33,800	-	-	-	-	-	-	-	-	-	-	-	10
12	158,800	99,600	74,800	33,800	-	-	-	-	-	-	-	-	-	-	-	12
15	133,100	99,600	74,800	33,800	39,900	29,700	-	-	-	-	-	-	-	-	-	15
20	102,000	99,600	74,200	33,800	39,900	29,700	33,800	27,700	30,000	27,600	-	-	-	-	-	20
25	78,500	77,900	62,300	33,800	39,900	29,700	33,800	27,700	30,000	27,600	28,300	27,500	-	-	-	25
30	61,700	60,900	53,400	33,800	39,900	29,700	33,800	27,700	30,000	27,600	28,300	26,100	26,400	24,100	-	30
35	-	47,600	46,300	33,800	39,300	29,700	33,800	27,700	30,000	27,400	28,300	23,900	26,400	23,600	20,700	35
40	-	36,900	35,900	33,800	34,600	29,700	31,200	27,700	28,800	25,000	27,100	21,500	25,400	22,000	20,700	40
45	-	29,400	28,500	33,800	30,600	29,700	27,600	26,300	25,500	23,000	24,000	19,500	22,900	20,500	20,100	45
50	-	23,900	23,000	29,000	25,000	29,700	24,700	23,900	22,800	21,200	21,400	17,800	20,400	19,100	19,000	50
55	-	-	18,800	24,500	20,800	25,300	21,800	22,000	20,500	19,800	19,200	16,300	18,300	17,600	17,600	55
60	-	-	15,400	21,000	17,400	21,700	18,400	20,300	18,500	18,200	17,400	15,000	16,500	16,200	15,800	60
65	-	-	12,800	18,200	14,600	18,900	15,700	18,800	16,400	16,900	15,700	14,000	14,900	15,100	14,300	65
70	-	-	-	-	12,300	16,500	13,400	17,000	14,100	15,700	14,300	13,000	13,600	14,100	13,000	70
75	-	-	-	-	10,400	14,600	11,400	15,000	12,200	14,700	12,700	12,100	12,400	13,200	11,800	75
80	-	-	-	-	8,800	12,900	9,800	13,300	10,500	13,600	11,000	11,400	11,300	12,400	10,800	80
85	-	-	-	-	-	-	8,400	11,800	9,100	12,100	9,600	10,700	10,000	11,200	9,900	85
90	-	-	-	-	-	-	7,200	10,600	7,900	10,800	8,400	10,100	8,800	9,900	9,000	90
95	-	-	-	-	-	-	6,100	9,500	6,800	9,700	7,300	9,500	7,600	8,800	7,900	95
100	-	-	-	-	-	-	-	-	5,800	8,700	6,300	8,900	6,700	7,800	6,900	100
105	-	-	-	-	-	-	-	-	5,000	7,900	5,500	8,000	5,800	7,000	6,100	105
110	-	-	-	-	-	-	-	-	4,300	7,100	4,700	7,200	5,000	6,200	5,300	110
115	-	-	-	-	-	-	-	-	-	-	4,000	6,500	4,300	5,500	4,600	115
120	-	-	-	-	-	-	-	-	-	-	3,400	5,900	3,700	4,900	4,000	120
125	-	-	-	-	-	-	-	-	-	-	2,900	5,400	3,200	4,300	3,400	125
130	-	-	-	-	-	-	-	-	-	-	-	-	2,700	3,800	2,900	130
135	-	-	-	-	-	-	-	-	-	-	-	-	2,200	3,300	2,400	135
140	-	-	-	-	-	-	-	-	-	-	-	-	1,800	2,900	2,000	140
145	-	-	-	-	-	-	-	-	-	-	-	-	-	-	1,600	145
1)	0°	0°	0°	0°	0°	0°	0°	0°	10°	0°	12°	0°	15°	13°	26°	
2)	1, 2	1	1	2	1	2	1	2	1	2	1	2	1	2	1, 2	2)
2.	0	50	100	0	100	0	100	0	100	0	100	0	100	50	100	
3.	0	0	0	33	16	50	33	67	50	83	67	100	83	100	100	
4.	0	0	0	33	16	50	33	67	50	83	67	100	83	100	100	
Top	0	0	0	33	16	50	33	67	50	83	67	100	83	100	100	

	42.0	57.7	73.3	73.3	89.0	89.0	104.7	104.7	120.3	136.0				(ft)
	35.2	50.7	66.1	66.1	81.7	81.8	97.2	97.2	112.1	126.7				(ft)
3) 0°	19,700	10,900	4,600	9,500	3,200	6,700	1,800	5,100	4,400	3,900				(lb)
2)	1, 2	1	1	2	1	2	1	2	2	2				

1) Minimum boom angle (º) for indicated length (no load)
2) Telescopic mode
3) Loaded boom angle (º)

NOTE:
The lifting capacity data stored in the LOAD MOMENT INDICATOR (AML-E2) is based on the standard number of parts of line listed in the chart.
Standard number of parts of line for each boom length should be according to the following table:

	42.0‘ (12.8 m)	42.0‘ to 73.3‘ (12.8 m to 22.4 m)		73.3‘ to 167.3‘ (22.4 m to 51 m)	Single top jib
2)	1, 2	1	2	1, 2	1, 2
	16	8	4	4	1

Main boom

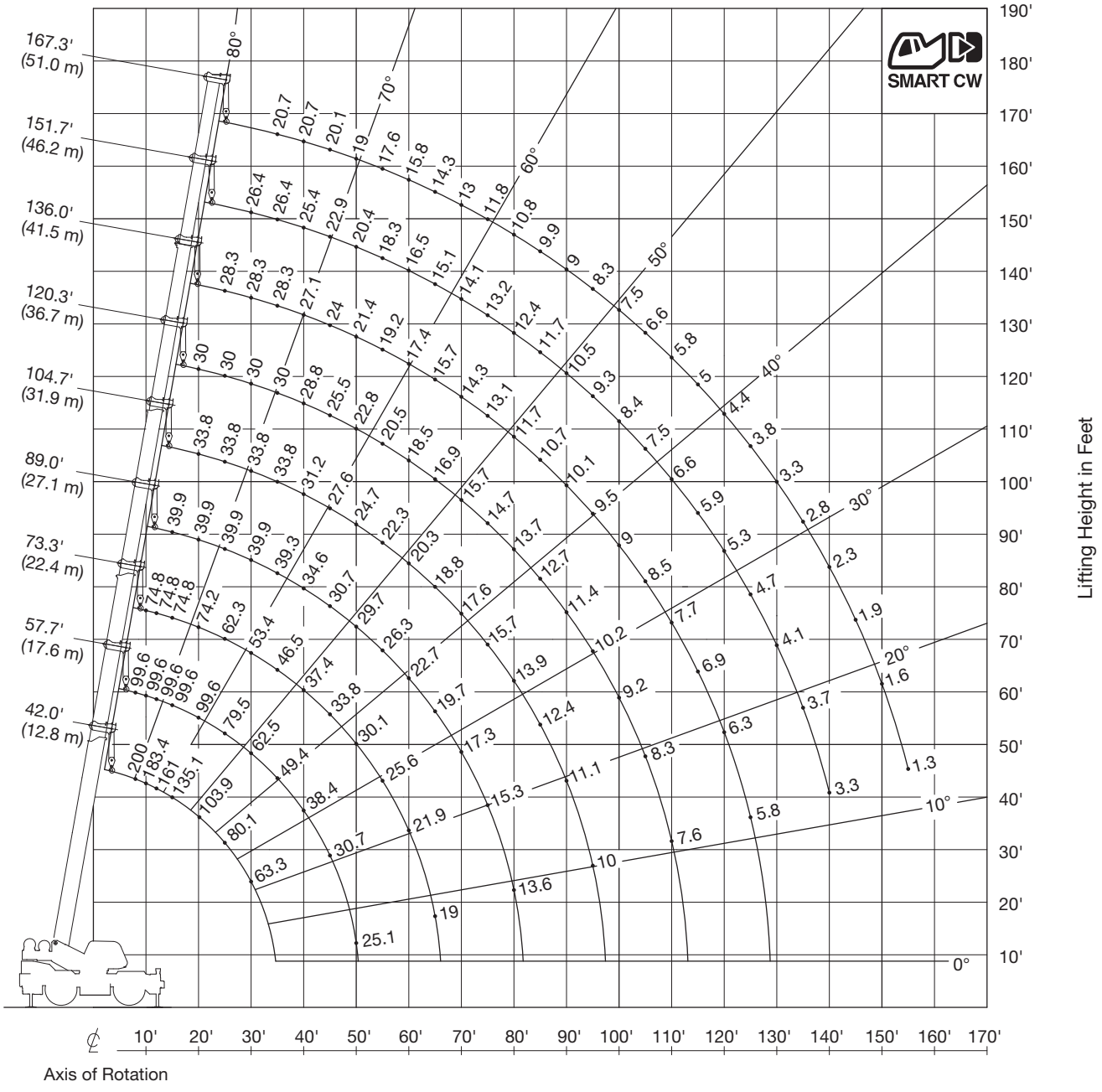

BOOM

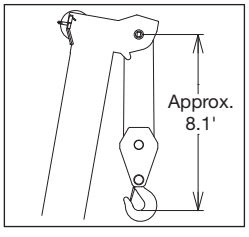

SINGLE TOP

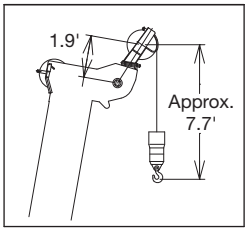

NOTE:
Boom geometry shown is for unloaded condition and machine standing level on firm supporting surface.
Boom deflection and subsequent radius and boom angle change must be accounted for when applying load to hook.
When boom length is same as telescoping mode 1 and 2, it show large load.

Fully extended – 360° – SMART CW2

24,700 lb (11.2 t) | **23‘ 11-3/8“ (7.3 m) spread** | **360°**

ft	42.0‘ (12.8 m)	57.7‘ (17.6 m)	73.3‘ (22.4 m)	73.3‘ (22.4 m)	89.0‘ (27.1 m)	89.0‘ (27.1 m)	104.7‘ (31.9 m)	104.7‘ (31.9 m)	120.3‘ (36.7 m)	120.3‘ (36.7 m)	136.0‘ (41.5 m)	136.0‘ (41.5 m)	151.7‘ (46.2 m)	151.7‘ (46.2 m)	167.3‘ (51 m)	ft
	lb															
8	200,000	99,600	-	-	-	-	-	-	-	-	-	-	-	-	-	8
10	183,400	99,600	74,800	33,800	-	-	-	-	-	-	-	-	-	-	-	10
12	161,000	99,600	74,800	33,800	-	-	-	-	-	-	-	-	-	-	-	12
15	135,100	99,600	74,800	33,800	39,900	29,700	-	-	-	-	-	-	-	-	-	15
20	103,900	99,600	74,200	33,800	39,900	29,700	33,800	27,700	30,000	27,600	-	-	-	-	-	20
25	80,100	79,500	62,300	33,800	39,900	29,700	33,800	27,700	30,000	27,600	28,300	27,500	-	-	-	25
30	63,300	62,500	53,400	33,800	39,900	29,700	33,800	27,700	30,000	27,600	28,300	26,100	26,400	24,100	-	30
35	-	49,400	46,500	33,800	39,300	29,700	33,800	27,700	30,000	27,400	28,300	23,900	26,400	23,600	20,700	35
40	-	38,400	37,400	33,800	34,600	29,700	31,200	27,700	28,800	25,000	27,100	21,500	25,400	22,000	20,700	40
45	-	30,700	29,800	33,800	30,700	29,700	27,600	26,300	25,500	23,000	24,000	19,500	22,900	20,500	20,100	45
50	-	25,100	24,100	30,100	26,200	29,700	24,700	23,900	22,800	21,200	21,400	17,800	20,400	19,100	19,000	50
55	-	-	19,800	25,600	21,800	26,300	22,300	22,000	20,500	19,800	19,200	16,300	18,300	17,600	17,600	55
60	-	-	16,400	21,900	18,300	22,700	19,300	20,300	18,500	18,200	17,400	15,000	16,500	16,200	15,800	60
65	-	-	13,600	19,000	15,400	19,700	16,500	18,800	16,800	16,900	15,700	14,000	14,900	15,100	14,300	65
70	-	-	-	-	13,100	17,300	14,100	17,600	14,900	15,700	14,300	13,000	13,600	14,100	13,000	70
75	-	-	-	-	11,100	15,300	12,100	15,700	12,900	14,700	13,100	12,100	12,400	13,200	11,800	75
80	-	-	-	-	9,400	13,600	10,400	13,900	11,200	13,700	11,700	11,400	11,300	12,400	10,800	80
85	-	-	-	-	-	-	9,000	12,400	9,700	12,700	10,200	10,700	10,400	11,700	9,900	85
90	-	-	-	-	-	-	7,700	11,100	8,400	11,400	9,000	10,100	9,300	10,500	9,000	90
95	-	-	-	-	-	-	6,600	10,000	7,300	10,200	7,800	9,500	8,200	9,300	8,300	95
100	-	-	-	-	-	-	-	-	6,300	9,200	6,800	9,000	7,200	8,400	7,500	100
105	-	-	-	-	-	-	-	-	5,500	8,300	5,900	8,500	6,300	7,500	6,600	105
110	-	-	-	-	-	-	-	-	4,700	7,600	5,100	7,700	5,500	6,600	5,800	110
115	-	-	-	-	-	-	-	-	-	-	4,400	6,900	4,800	5,900	5,000	115
120	-	-	-	-	-	-	-	-	-	-	3,800	6,300	4,100	5,300	4,400	120
125	-	-	-	-	-	-	-	-	-	-	3,300	5,800	3,500	4,700	3,800	125
130	-	-	-	-	-	-	-	-	-	-	-	-	3,000	4,100	3,300	130
135	-	-	-	-	-	-	-	-	-	-	-	-	2,600	3,700	2,800	135
140	-	-	-	-	-	-	-	-	-	-	-	-	2,200	3,300	2,300	140
145	-	-	-	-	-	-	-	-	-	-	-	-	-	-	1,900	145
150	-	-	-	-	-	-	-	-	-	-	-	-	-	-	1,600	150
155	-	-	-	-	-	-	-	-	-	-	-	-	-	-	1,300	155
1)	0°	0°	0°	0°	0°	0°	0°	0°	10°	0°	12°	0°	15°	13°	18°	
2)	1, 2	1	1	2	1	2	1	2	1	2	1	2	1	2	1, 2	2)
2.	0	50	100	0	100	0	100	0	100	0	100	0	100	50	100	
3.	0	0	0	33	16	50	33	67	50	83	67	100	83	100	100	
4.	0	0	0	33	16	50	33	67	50	83	67	100	83	100	100	
Top	0	0	0	33	16	50	33	67	50	83	67	100	83	100	100	

	42.0	57.7	73.3	73.3	89.0	89.0	104.7	104.7	120.3	136.0		(ft)
	35.2	50.7	66.1	66.1	81.7	81.8	97.2	97.2	112.1	126.7		(ft)
3) 0°	19,700	10,900	4,600	9,500	3,200	6,700	1,800	5,200	4,500	4,100		(lb)
2)	1, 2	1	1	2	1	2	1	2	2	2		

1) Minimum boom angle (º) for indicated length (no load)
2) Telescopic mode
3) Loaded boom angle (º)

SMART CW2

NOTE: The lifting capacity data stored in the LOAD MOMENT INDICATOR (AML-E2) is based on the standard number of parts of line listed in the chart. Standard number of parts of line for each boom length should be according to the following table:

	42.0‘ (12.8 m)	42.0‘ to 73.3‘ (12.8 m to 22.4 m)		73.3‘ to 167.3‘ (22.4 m to 51 m)	Single top jib
2)	1, 2	1	2	1, 2	1, 2
	16	8	4	4	1

Main boom

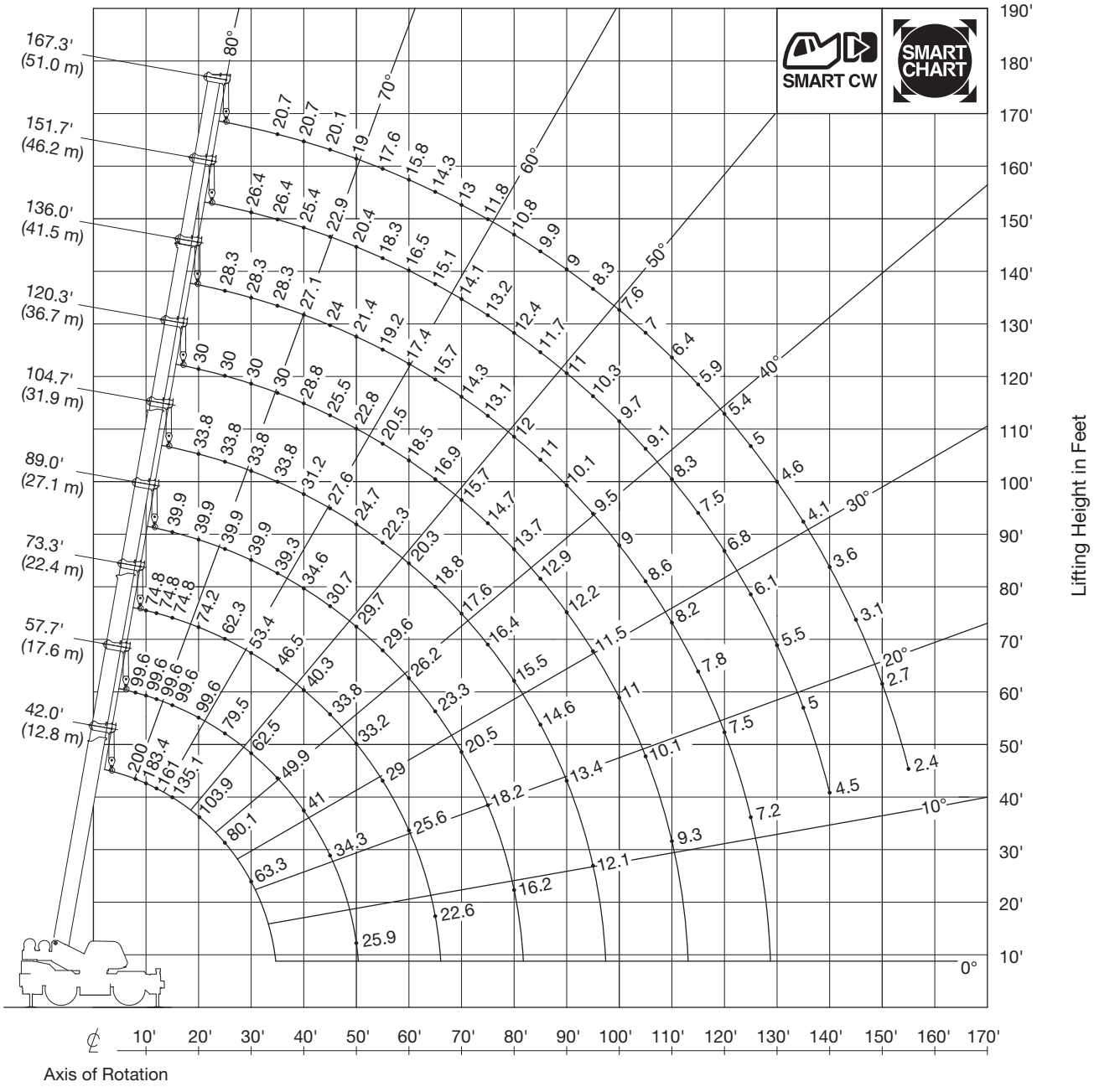

BOOM

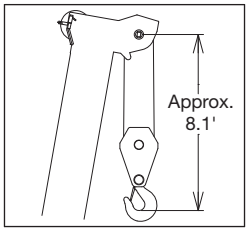

SINGLE TOP

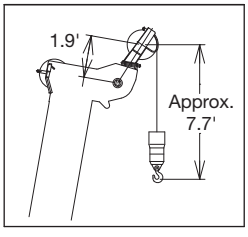

NOTE:
Boom geometry shown is for unloaded condition and machine standing level on firm supporting surface.

Boom deflection and subsequent radius and boom angle change must be accounted for when applying load to hook.
When boom length is same as telescoping mode 1 and 2, it show large load.

Fully extended – Smart Chart / SMART CW2

24,700 lb (11.2 t) **23‘ 11-3/8“ (7.3 m) spread**

ft	42.0‘ (12.8 m)	57.7‘ (17.6 m)	73.3‘ (22.4 m)	73.3‘ (22.4 m)	89.0‘ (27.1 m)	89.0‘ (27.1 m)	104.7‘ (31.9 m)	104.7‘ (31.9 m)	120.3‘ (36.7 m)	120.3‘ (36.7 m)	136.0‘ (41.5 m)	136.0‘ (41.5 m)	151.7‘ (46.2 m)	151.7‘ (46.2 m)	167.3‘ (51 m)	ft
	lb															
8	200,000	99,600	-	-	-	-	-	-	-	-	-	-	-	-	-	8
10	183,400	99,600	74,800	33,800	-	-	-	-	-	-	-	-	-	-	-	10
12	161,000	99,600	74,800	33,800	-	-	-	-	-	-	-	-	-	-	-	12
15	135,100	99,600	74,800	33,800	39,900	29,700	-	-	-	-	-	-	-	-	-	15
20	103,900	99,600	74,200	33,800	39,900	29,700	33,800	27,700	30,000	27,600	-	-	-	-	-	20
25	80,100	79,500	62,300	33,800	39,900	29,700	33,800	27,700	30,000	27,600	28,300	27,500	-	-	-	25
30	63,300	62,500	53,400	33,800	39,900	29,700	33,800	27,700	30,000	27,600	28,300	26,100	26,400	24,100	-	30
35	-	49,900	46,500	33,800	39,300	29,700	33,800	27,700	30,000	27,400	28,300	23,900	26,400	23,600	20,700	35
40	-	41,000	40,300	33,800	34,600	29,700	31,200	27,700	28,800	25,000	27,100	21,500	25,400	22,000	20,700	40
45	-	34,300	33,600	33,800	30,700	29,700	27,600	26,300	25,500	23,000	24,000	19,500	22,900	20,500	20,100	45
50	-	25,900	28,400	33,200	27,500	29,700	24,700	23,900	22,800	21,200	21,400	17,800	20,400	19,100	19,000	50
55	-	-	24,200	29,000	24,800	29,600	22,300	22,000	20,500	19,800	19,200	16,300	18,300	17,600	17,600	55
60	-	-	20,200	25,600	22,200	26,200	20,200	20,300	18,500	18,200	17,400	15,000	16,500	16,200	15,800	60
65	-	-	17,100	22,600	18,900	23,300	18,300	18,800	16,800	16,900	15,700	14,000	14,900	15,100	14,300	65
70	-	-	-	-	16,100	20,500	16,800	17,600	15,400	15,700	14,300	13,000	13,600	14,100	13,000	70
75	-	-	-	-	13,900	18,200	15,000	16,400	14,100	14,700	13,100	12,100	12,400	13,200	11,800	75
80	-	-	-	-	11,900	16,200	13,000	15,500	12,900	13,700	12,000	11,400	11,300	12,400	10,800	80
85	-	-	-	-	-	-	11,300	14,600	11,900	12,900	11,000	10,700	10,400	11,700	9,900	85
90	-	-	-	-	-	-	9,900	13,400	10,600	12,200	10,100	10,100	9,500	11,000	9,000	90
95	-	-	-	-	-	-	8,600	12,100	9,300	11,500	9,300	9,500	8,700	10,300	8,300	95
100	-	-	-	-	-	-	-	-	8,200	11,000	8,600	9,000	8,000	9,700	7,600	100
105	-	-	-	-	-	-	-	-	7,200	10,100	7,700	8,600	7,400	9,100	7,000	105
110	-	-	-	-	-	-	-	-	6,300	9,300	6,800	8,200	6,800	8,300	6,400	110
115	-	-	-	-	-	-	-	-	-	-	6,000	7,800	6,300	7,500	5,900	115
120	-	-	-	-	-	-	-	-	-	-	5,300	7,500	5,600	6,800	5,400	120
125	-	-	-	-	-	-	-	-	-	-	4,700	7,200	5,000	6,100	5,000	125
130	-	-	-	-	-	-	-	-	-	-	-	-	4,400	5,500	4,600	130
135	-	-	-	-	-	-	-	-	-	-	-	-	3,800	5,000	4,100	135
140	-	-	-	-	-	-	-	-	-	-	-	-	3,400	4,500	3,600	140
145	-	-	-	-	-	-	-	-	-	-	-	-	-	-	3,100	145
150	-	-	-	-	-	-	-	-	-	-	-	-	-	-	2,700	150
155	-	-	-	-	-	-	-	-	-	-	-	-	-	-	2,400	155
1)	0°	0°	0°	0°	0°	0°	0°	0°	9°	0°	11°	0°	13°	12°	16°	
2)	1, 2	1	1	2	1	2	1	2	1	2	1	2	1	2	1, 2	2)
2.	0	50	100	0	100	0	100	0	100	0	100	0	100	50	100	
3.	0	0	0	33	16	50	33	67	50	83	67	100	83	100	100	
4.	0	0	0	33	16	50	33	67	50	83	67	100	83	100	100	
Top	0	0	0	33	16	50	33	67	50	83	67	100	83	100	100	

	42.0	57.7	73.3	73.3	89.0	89.0	104.7	104.7	120.3	136.0		(ft)
	35.2	50.7	66.1	66.1	81.7	81.7	97.2	97.2	112.1	126.5		(ft)
3) 0°	19,700	10,900	4,600	9,500	3,400	7,000	2,000	5,400	5,100	5,200		(lb)
2)	1, 2	1	1	2	1	2	1	2	2	2		

1) Minimum boom angle (º) for indicated length (no load)
2) Telescopic mode
3) Loaded boom angle (º)

SMART CW2

Smart Chart

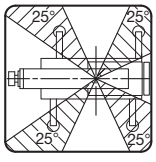

NOTE: The lifting capacity data stored in the LOAD MOMENT INDICATOR (AML-E2) is based on the standard number of parts of line listed in the chart. Standard number of parts of line for each boom length should be according to the following table:

	42.0‘ (12.8 m)	42.0‘ to 73.3‘ (12.8 m to 22.4 m)		73.3‘ to 167.3‘ (22.4 m to 51 m)	Single top jib
2)	1, 2	1	2	1, 2	1, 2
	16	8	4	4	1

On rubber stationary – SMART CW1

24,700 lb (11.2 t)	0° *			
	42.0‘ (12.8 m)	73.3‘ (22.4 m)	89.0‘ (27.1 m)	104.7‘ (31.9 m)
ft	lb			
12	65,000	-	-	-
15	53,700	-	-	-
20	40,400	33,800	29,700	-
25	31,400	33,800	29,700	27,700
30	24,200	27,300	27,800	27,700
35	-	21,200	21,700	22,000
40	-	16,800	17,400	17,800
45	-	13,600	14,200	14,500
50	-	11,100	11,600	12,000
55	-	9,100	9,700	10,000
60	-	7,500	8,000	8,400
65	-	6,200	6,700	7,100
70	-	-	5,600	5,900
75	-	-	4,700	5,000
80	-	-	3,900	4,200
85	-	-	-	3,400
90	-	-	-	2,800
95	-	-	-	2,300
1)	0°	0°	0°	0°
2)	1, 2	2	2	2
2.	0	0	0	0
3.	0	33	50	67
4.	0	33	50	67
Top	0	33	50	67
	42.0‘	73.3‘	89.0‘	104.7‘
	35.2‘	66.1‘	81.8‘	97.3‘
3) 0°	18,400	5,100	3,300	2,200

24,700 lb (11.2 t)	360°			
	42.0‘ (12.8 m)	73.3‘ (22.4 m)	89.0‘ (27.1 m)	104.7‘ (31.9 m)
ft	lb			
12	43,000	-	-	-
15	32,600	-	-	-
20	19,400	22,900	22,900	-
25	12,500	15,700	16,400	16,800
30	8,100	11,200	11,800	12,200
35	-	8,100	8,700	9,100
40	-	5,800	6,400	6,800
45	-	4,100	4,700	5,100
50	-	2,800	3,400	3,700
55	-	1,700	2,300	2,600
60	-	-	-	-
65	-	-	-	-
70	-	-	-	-
75	-	-	-	-
80	-	-	-	-
85	-	-	-	-
90	-	-	-	-
95	-	-	-	-
1)	0°	29°	43°	50°
2)	1, 2	2	2	2
2.	0	0	0	0
3.	0	33	50	67
4.	0	33	50	67
Top	0	33	50	67
	42.0‘			
	35.2‘			
3) 0°	5,100			

1) Minimum boom angle (º) for indicated length (no load)
2) Telescopic mode
3) Loaded boom angle (º)
* over front

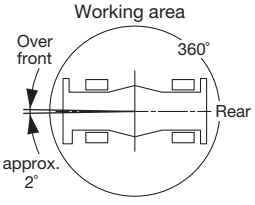

NOTE:
The lifting capacity data stored in the LOAD MOMENT INDICATOR (AML-E2) is based on the standard number of parts of line listed in the chart. Standard number of parts of line for on-rubber operation should be according to the chart.

	42.0‘ (12.8 m)	42.0‘ to 104.7‘ (12.8 m to 31.9 m)	Single top jib
	6	4	1

On rubber creep – SMART CW1

24,700 lb (11.2 t)	0° *			
	42.0‘ (12.8 m)	73.3‘ (22.4 m)	89.0‘ (27.1 m)	104.7‘ (31.9 m)
ft	lb			
12	50,600	-	-	-
15	41,400	-	-	-
20	30,400	33,300	29,700	-
25	23,200	26,100	26,700	27,000
30	17,900	20,900	21,500	21,900
35	-	17,000	17,600	17,900
40	-	13,900	14,500	14,900
45	-	11,400	12,000	12,400
50	-	9,400	10,000	10,400
55	-	7,700	8,300	8,700
60	-	6,300	6,900	7,300
65	-	5,100	5,700	6,100
70	-	-	4,700	5,000
75	-	-	3,800	4,100
80	-	-	3,000	3,300
85	-	-	-	2,600
90	-	-	-	2,000
95	-	-	-	1,500
1)	0°	0°	0°	0°
2)	1, 2	2	2	2
2.	0	0	0	0
3.	0	33	50	67
4.	0	33	50	67
Top	0	33	50	67
	42.0‘	73.3‘	89.0‘	104.7‘
	35.2‘	66.1‘	81.8‘	97.3‘
3) 0°	13,600	4,200	2,400	1,400

1) Minimum boom angle (º) for indicated length (no load)
2) Telescopic mode
3) Loaded boom angle (º)
* over front

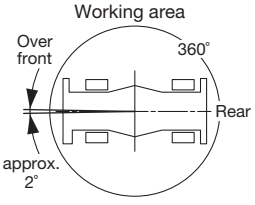

NOTE:
The lifting capacity data stored in the LOAD MOMENT INDICATOR (AML-E2) is based on the standard number of parts of line listed in the chart. Standard number of parts of line for on-rubber operation should be according to the chart.

	42.0‘ (12.8 m)	42.0‘ to 104.7‘ (12.8 m to 31.9 m)	Single top jib
	6	4	1

On rubber stationary – SMART CW2

24,700 lb (11.2 t)	0° *			
	42.0‘ (12.8 m)	73.3‘ (22.4 m)	89.0‘ (27.1 m)	104.7‘ (31.9 m)
ft	lb			
12	67,600	-	-	-
15	56,000	-	-	-
20	42,300	33,800	29,700	-
25	33,000	33,800	29,700	27,700
30	25,900	29,000	29,400	27,700
35	-	22,600	23,000	23,300
40	-	18,000	18,600	18,800
45	-	14,600	15,200	15,500
50	-	12,000	12,500	12,900
55	-	9,900	10,500	10,800
60	-	8,200	8,800	9,100
65	-	6,900	7,400	7,700
70	-	-	6,200	6,500
75	-	-	5,200	5,600
80	-	-	4,400	4,700
85	-	-	-	3,900
90	-	-	-	3,300
95	-	-	-	2,800
1)	0°	0°	0°	0°
2)	1, 2	2	2	2
2.	0	0	0	0
3.	0	33	50	67
4.	0	33	50	67
Top	0	33	50	67
	42.0‘	73.3‘	89.0‘	104.7‘
	35.2‘	66.1‘	81.8‘	97.2‘
3) 0°	19,900	5,700	3,700	2,600

24,700 lb (11.2 t)	360°			
	42.0‘ (12.8 m)	73.3‘ (22.4 m)	89.0‘ (27.1 m)	104.7‘ (31.9 m)
ft	lb			
12	-	-	-	-
15	-	-	-	-
20	21,800	-	-	-
25	14,200	17,500	-	-
30	9,500	12,600	13,200	13,200
35	-	9,300	9,900	10,300
40	-	6,900	7,500	7,900
45	-	5,000	5,600	6,000
50	-	3,600	4,200	4,600
55	-	2,500	3,000	3,400
60	-	1,500	2,100	2,400
65	-	-	1,300	-
70	-	-	-	-
75	-	-	-	-
80	-	-	-	-
85	-	-	-	-
90	-	-	-	-
95	-	-	-	-
1)	0°	20°	37°	47°
2)	1, 2	2	2	2
2.	0	0	0	0
3.	0	33	50	67
4.	0	33	50	67
Top	0	33	50	67
	42.0‘			
	35.2‘			
3) 0°	6,200			

1) Minimum boom angle (º) for indicated length (no load)
2) Telescopic mode
3) Loaded boom angle (º)
* over front

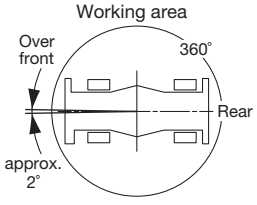

SMART CW2

NOTE:
The lifting capacity data stored in the LOAD MOMENT INDICATOR (AML-E2) is based on the standard number of parts of line listed in the chart. Standard number of parts of line for on-rubber operation should be according to the chart.

	42.0‘ (12.8 m)	42.0‘ to 104.7‘ (12.8 m to 31.9 m)	Single top jib
	6	4	1

On rubber creep – SMART CW2

24,700 lb (11.2 t)	0° *			
	42.0‘ (12.8 m)	73.3‘ (22.4 m)	89.0‘ (27.1 m)	104.7‘ (31.9 m)
ft	lb			
12	53,300	-	-	-
15	43,600	-	-	-
20	32,300	33,800	29,700	-
25	24,800	27,600	28,200	27,700
30	19,300	22,300	22,900	23,200
35	-	18,100	18,700	19,100
40	-	14,900	15,500	15,900
45	-	12,300	12,900	13,300
50	-	10,200	10,800	11,200
55	-	8,500	9,100	9,500
60	-	7,000	7,600	8,000
65	-	5,800	6,400	6,800
70	-	-	5,300	5,700
75	-	-	4,400	4,700
80	-	-	3,600	3,900
85	-	-	-	3,200
90	-	-	-	2,500
95	-	-	-	2,000
1)	0°	0°	0°	0°
2)	1, 2	2	2	2
2.	0	0	0	0
3.	0	33	50	67
4.	0	33	50	67
Top	0	33	50	67
	42.0‘	73.3‘	89.0‘	104.7‘
	35.2‘	66.1‘	81.8‘	97.3‘
3) 0°	14,700	4,800	3,000	1,900

1) Minimum boom angle (º) for indicated length (no load)
2) Telescopic mode
3) Loaded boom angle (º)
* over front

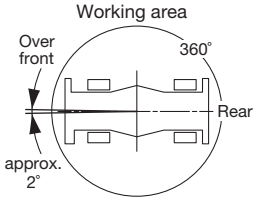

SMART CW2

NOTE:
The lifting capacity data stored in the LOAD MOMENT INDICATOR (AML-E2) is based on the standard number of parts of line listed in the chart. Standard number of parts of line for on-rubber operation should be according to the chart.

	42.0‘ (12.8 m)	42.0‘ to 104.7‘ (12.8 m to 31.9 m)	Single top jib
	6	4	1

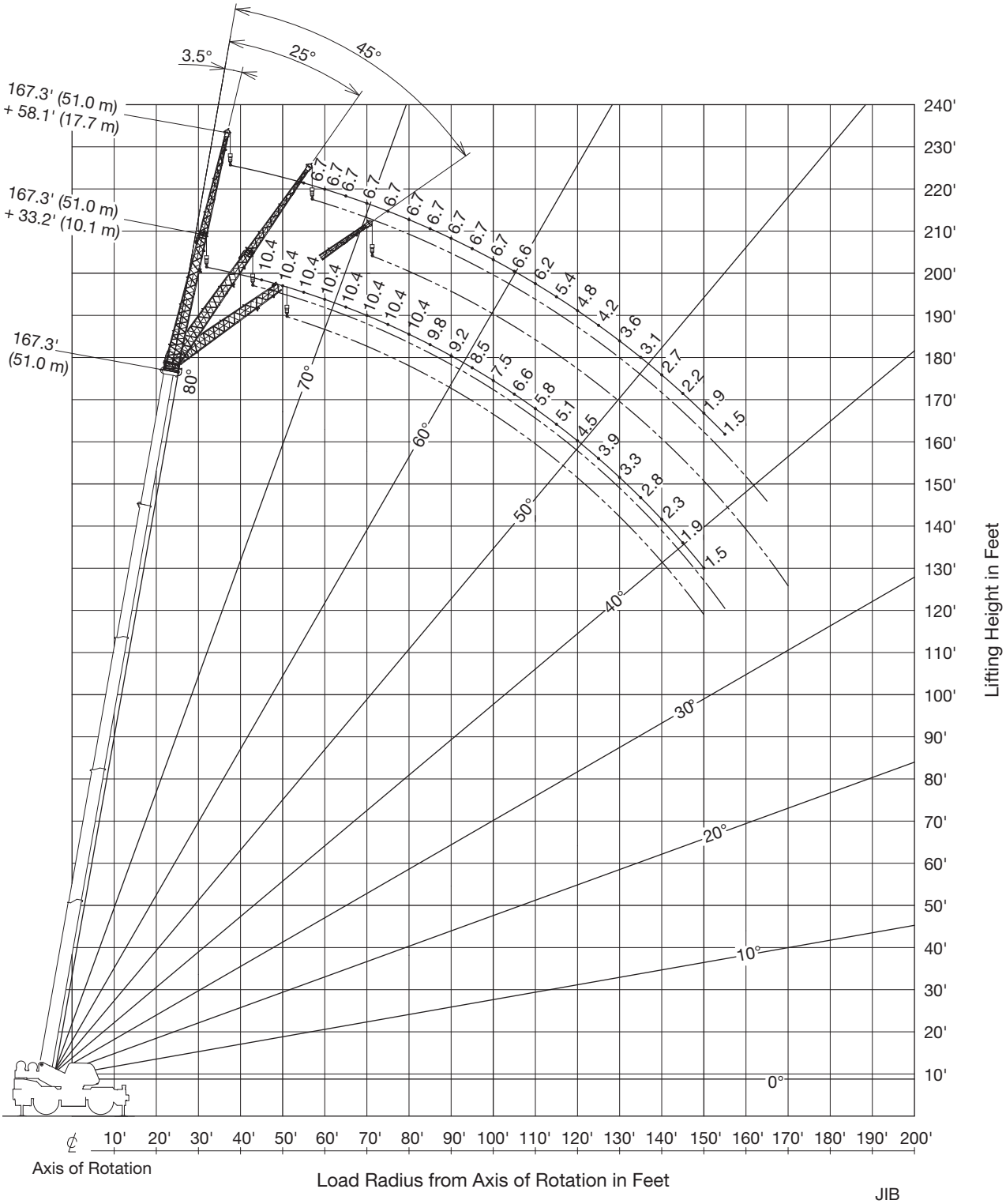

JIB

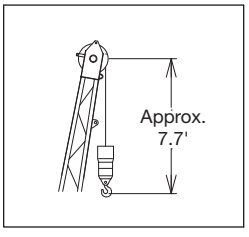

NOTE:

Jib geometry shown are for unloaded condition and machine standing level on firm supporting surface.
Boom deflection and subsequent radius and boom angle change must be accounted for when applying load to hook.

Fully extended – 360° – SMART CW1

24,700 lb (11.2 t)	23‘ 11-3/8“ (7.3 m) spread			360°			
	167.3‘ (51 m) + 33.2‘ (10.1 m)				167.3‘ (51 m) + 58.1‘ (17.7 m)		
	3.5°	25°	45°		3.5°	25°	45°
ft	lb			ft	lb		
45	10,400	-	-	45	-	-	-
50	10,400	-	-	50	-	-	-
55	10,400	-	-	55	6,700	-	-
60	10,400	10,400	-	60	6,700	-	-
65	10,400	10,400	9,800	65	6,700	-	-
70	10,400	10,400	9,600	70	6,700	-	-
75	10,400	10,200	9,400	75	6,700	6,200	-
80	10,400	9,500	9,000	80	6,700	6,100	-
85	9,800	9,000	8,500	85	6,700	5,900	-
90	9,200	8,500	8,100	90	6,700	5,800	4,800
95	8,500	8,000	7,700	95	6,700	5,600	4,700
100	7,500	7,600	7,300	100	6,700	5,500	4,600
105	6,600	7,200	6,900	105	6,600	5,400	4,500
110	5,800	6,700	6,600	110	6,200	5,300	4,400
115	5,100	5,900	6,300	115	5,400	5,200	4,300
120	4,500	5,100	5,600	120	4,800	5,000	4,200
125	3,900	4,500	4,900	125	4,200	4,900	4,200
130	3,300	3,900	4,300	130	3,600	4,600	4,100
135	2,800	3,400	3,700	135	3,100	4,200	4,000
140	2,300	2,800	3,100	140	2,700	3,700	4,000
145	1,900	2,400	2,600	145	2,200	3,200	3,800
150	1,500	1,900	2,100	150	1,900	2,700	3,200
155	-	1,500	-	155	1,500	2,300	2,800
160	-	-	-	160	-	1,900	2,300
165	-	-	-	165	-	1,500	1,900
170	-	-	-	170	-	-	1,500
1)	1, 2	1, 2	1, 2	1)	1, 2	1, 2	1, 2

1) Telescopic mode

Fully extended – 360° – SMART CW1

24,700 lb (11.2 t) 23‘ 11-3/8“ (7.3 m) spread 360°

	151.7‘ (46.2 m) + 33.2‘ (10.1 m)					
	3.5°	3.5°	25°	25°	45°	45°
ft	lb					
40	12,500	11,500	-	-	-	-
45	12,500	11,500	-	-	-	-
50	12,500	11,500	-	-	-	-
55	12,500	11,500	12,500	11,500	-	-
60	12,500	11,500	12,500	11,500	10,000	10,000
65	12,500	11,500	12,100	11,100	9,800	9,700
70	12,500	11,500	11,700	10,300	9,600	9,500
75	12,500	10,900	11,400	9,700	9,400	9,200
80	11,700	10,300	11,000	9,100	9,200	8,600
85	10,700	9,800	10,700	8,500	9,100	8,200
90	9,800	8,600	10,100	8,000	8,900	7,700
95	8,700	8,000	9,300	7,600	8,800	7,300
100	7,700	7,600	8,600	7,100	8,700	6,900
105	6,800	7,100	7,600	6,800	8,000	6,600
110	6,000	6,700	6,700	6,400	7,200	6,200
115	5,200	6,200	6,000	6,100	6,300	6,000
120	4,600	5,600	5,200	5,800	5,600	5,700
125	4,000	5,000	4,600	5,400	4,900	5,400
130	3,400	4,400	3,900	4,900	4,200	5,000
135	2,900	3,900	3,400	4,300	3,600	4,500
140	2,400	3,400	2,900	3,800	-	-
145	2,000	3,000	2,400	3,300	-	-
150	1,600	2,600	1,900	2,900	-	-
155	1,300	2,200	1,500	2,400	-	-
160	-	1,900	1,100	2,100	-	-
165	-	1,500	-	1,700	-	-
170	-	1,300	-	-	-	-
175	-	1,000	-	-	-	-
180	-	-	-	-	-	-
185	-	-	-	-	-	-
1)	1	2	1	2	1	2

	151.7‘ (46.2 m) + 58.1‘ (17.7 m)					
	3.5°	3.5°	25°	25°	45°	45°
ft	lb					
40	-	-	-	-	-	-
45	-	-	-	-	-	-
50	7,600	7,200	-	-	-	-
55	7,600	7,200	-	-	-	-
60	7,600	7,200	-	-	-	-
65	7,600	7,200	-	-	-	-
70	7,600	7,200	6,500	6,500	-	-
75	7,600	7,200	6,300	6,300	-	-
80	7,600	7,200	6,200	6,100	5,000	-
85	7,600	7,200	6,000	5,900	4,900	4,900
90	7,600	7,200	5,900	5,800	4,800	4,800
95	7,300	7,000	5,700	5,600	4,700	4,700
100	7,100	6,500	5,600	5,500	4,600	4,500
105	6,900	6,100	5,400	5,400	4,500	4,500
110	6,400	5,800	5,300	5,300	4,400	4,400
115	5,700	5,400	5,200	5,100	4,300	4,300
120	5,000	5,100	5,000	4,800	4,200	4,200
125	4,400	4,800	4,900	4,600	4,100	4,100
130	3,900	4,600	4,700	4,300	4,100	4,100
135	3,400	4,300	4,300	4,100	4,000	4,000
140	2,900	3,800	3,800	3,900	4,000	3,800
145	2,500	3,400	3,300	3,700	3,800	3,700
150	2,100	3,000	2,800	3,500	3,300	3,500
155	1,700	2,600	2,400	3,200	2,800	3,300
160	1,300	2,200	2,000	2,800	2,300	3,100
165	-	1,900	1,600	2,500	-	-
170	-	1,600	1,300	2,100	-	-
175	-	1,400	-	1,800	-	-
180	-	1,100	-	1,500	-	-
185	-	-	-	1,200	-	-
1)	1	2	1	2	1	2

1) Telescopic mode

Fully extended – 360° – SMART CW1

24,700 lb (11.2 t) | 23‘ 11-3/8“ (7.3 m) spread | 360°

	120.3‘ (36.7 m) + 33.2‘ (10.1 m)					
	3.5°	3.5°	25°	25°	45°	45°
ft	lb					
30	14,600	14,600	-	-	-	-
35	14,600	14,600	-	-	-	-
40	14,600	14,600	14,400	-	-	-
45	14,600	14,600	13,800	13,600	-	-
50	14,600	14,600	13,200	13,000	10,400	10,400
55	14,600	14,600	12,700	12,500	10,200	10,100
60	14,600	14,400	12,200	12,000	9,900	9,800
65	14,600	13,400	11,800	11,600	9,700	9,600
70	14,600	12,600	11,400	11,200	9,500	9,400
75	13,900	12,400	11,000	10,800	9,300	9,200
80	12,400	11,700	10,700	10,500	9,200	9,100
85	10,900	11,000	10,400	10,200	9,000	8,900
90	9,600	10,300	10,100	9,900	8,900	8,800
95	8,500	9,800	9,300	9,700	8,800	8,700
100	7,500	9,300	8,200	9,200	8,600	8,600
105	6,500	8,800	7,200	8,700	7,600	8,500
110	5,800	7,900	6,300	8,300	6,600	8,300
115	5,000	7,200	5,500	7,600	5,800	7,800
120	4,300	6,500	4,800	6,900	-	-
125	3,700	5,900	4,100	6,200	-	-
130	3,200	5,400	3,500	5,600	-	-
135	2,700	4,900	2,900	5,000	-	-
140	2,200	4,400	-	-	-	-
145	1,800	4,000	-	-	-	-
150	-	-	-	-	-	-
155	-	-	-	-	-	-
160	-	-	-	-	-	-
165	-	-	-	-	-	-
170	-	-	-	-	-	-
1)	1	2	1	2	1	2

	120.3‘ (36.7 m) + 58.1‘ (17.7 m)					
	3.5°	3.5°	25°	25°	45°	45°
ft	lb					
30	-	-	-	-	-	-
35	-	-	-	-	-	-
40	9,900	8,700	-	-	-	-
45	9,900	8,700	-	-	-	-
50	9,900	8,700	-	-	-	-
55	9,900	8,700	-	-	-	-
60	9,900	8,700	7,200	7,000	-	-
65	9,600	8,700	7,000	6,800	-	-
70	9,100	8,700	6,700	6,500	5,300	5,300
75	8,700	8,400	6,500	6,300	5,200	5,100
80	8,300	8,000	6,300	6,200	5,000	5,000
85	8,000	7,700	6,100	6,000	4,900	4,800
90	7,700	7,400	5,800	5,800	4,700	4,700
95	7,400	7,100	5,600	5,500	4,600	4,600
100	7,100	6,900	5,400	5,300	4,500	4,500
105	6,800	6,600	5,200	5,200	4,400	4,400
110	6,600	6,400	5,100	5,000	4,300	4,300
115	6,000	6,200	4,900	4,900	4,300	4,200
120	5,300	6,000	4,800	4,700	4,200	4,100
125	4,700	5,800	4,600	4,600	4,100	4,100
130	4,100	5,600	4,500	4,500	4,100	4,000
135	3,600	5,300	4,300	4,300	4,000	4,000
140	3,100	5,000	3,700	4,300	4,000	4,000
145	2,700	4,500	3,200	4,200	-	-
150	2,300	4,100	2,800	4,100	-	-
155	1,900	3,700	2,300	4,000	-	-
160	1,600	3,400	1,900	3,600	-	-
165	1,300	3,100	-	-	-	-
170	-	2,800	-	-	-	-
1)	1	2	1	2	1	2

1) Telescopic mode

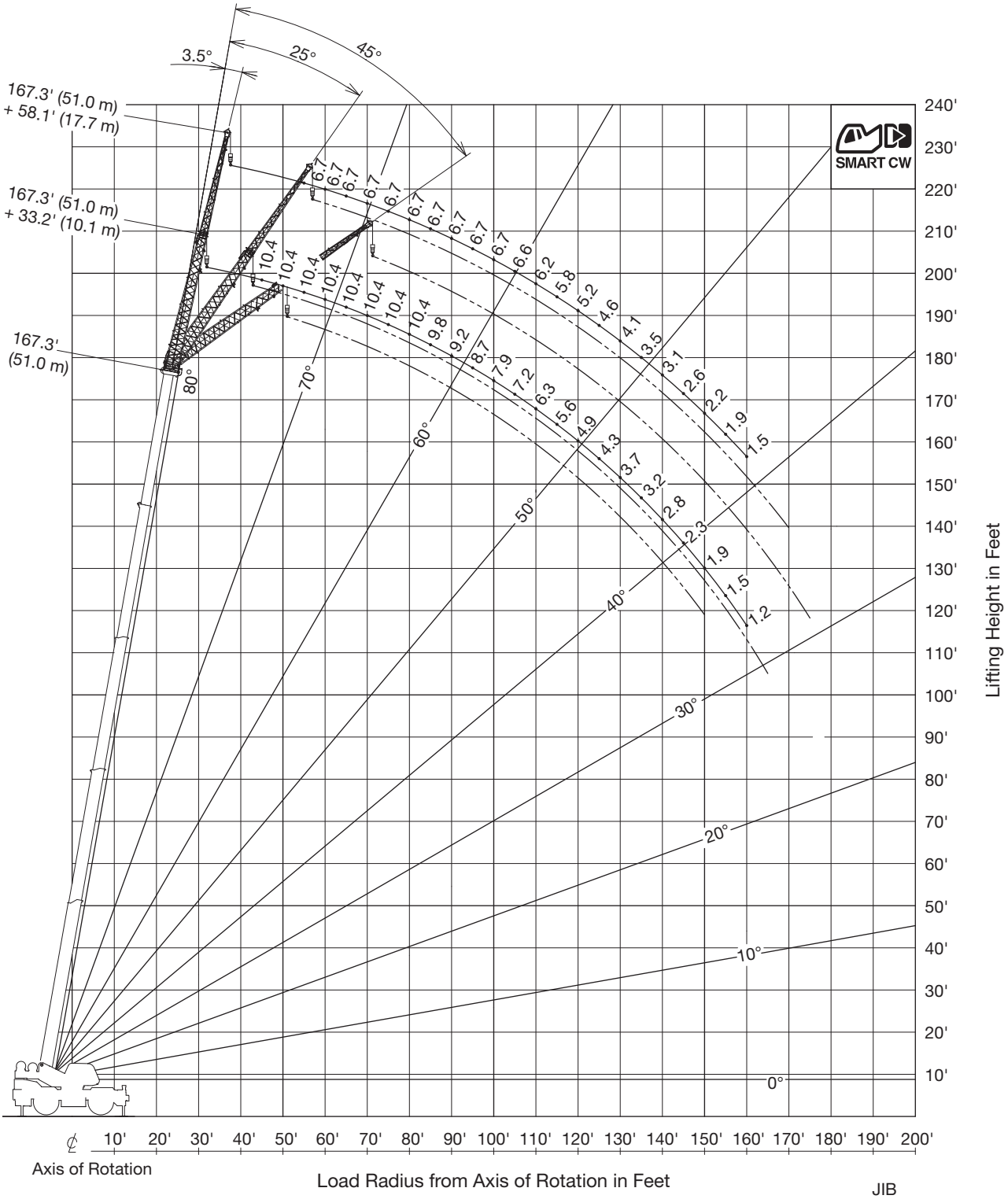

JIB

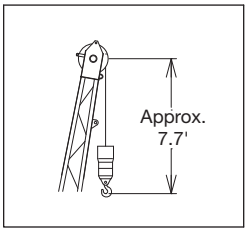

NOTE:

Jib geometry shown are for unloaded condition and machine standing level on firm supporting surface.
Boom deflection and subsequent radius and boom angle change must be accounted for when applying load to hook.

Fully extended – 360° – SMART CW2

24,700 lb (11.2 t) 23‘ 11-3/8“ (7.3 m) spread 360°

	167.3‘ (51 m) + 33.2‘ (10.1 m)		
	3.5°	25°	45°
ft	lb		
45	10,400	-	-
50	10,400	-	-
55	10,400	-	-
60	10,400	10,400	-
65	10,400	10,400	9,800
70	10,400	10,400	9,600
75	10,400	10,200	9,400
80	10,400	9,500	9,000
85	9,800	9,000	8,500
90	9,200	8,500	8,100
95	8,700	8,000	7,700
100	7,900	7,600	7,300
105	7,200	7,200	6,900
110	6,300	6,800	6,600
115	5,600	6,300	6,300
120	4,900	5,600	6,000
125	4,300	4,900	5,300
130	3,700	4,300	4,700
135	3,200	3,800	4,100
140	2,800	3,200	3,500
145	2,300	2,800	3,000
150	1,900	2,300	2,500
155	1,500	1,900	-
160	1,200	1,500	-
165	-	1,100	-
170	-	-	-
175	-	-	-
1)	1, 2	1, 2	1, 2

	167.3‘ (51 m) + 58.1‘ (17.7 m)		
	3.5°	25°	45°
ft	lb		
45	-	-	-
50	-	-	-
55	6,700	-	-
60	6,700	-	-
65	6,700	-	-
70	6,700	-	-
75	6,700	6,200	-
80	6,700	6,100	-
85	6,700	5,900	-
90	6,700	5,800	4,800
95	6,700	5,600	4,700
100	6,700	5,500	4,600
105	6,600	5,400	4,500
110	6,200	5,300	4,400
115	5,800	5,200	4,300
120	5,200	5,000	4,200
125	4,600	4,900	4,200
130	4,100	4,600	4,100
135	3,500	4,400	4,000
140	3,100	4,100	4,000
145	2,600	3,500	3,900
150	2,200	3,100	3,600
155	1,900	2,600	3,100
160	1,500	2,200	2,700
165	-	1,900	2,200
170	-	1,500	1,800
175	-	-	1,400
1)	1, 2	1, 2	1, 2

1) Telescopic mode

SMART CW

SMART CW2

Fully extended – 360° – SMART CW2

24,700 lb (11.2 t) | 23‘ 11-3/8“ (7.3 m) spread | 360°

	151.7‘ (46.2 m) + 33.2‘ (10.1 m)					
	3.5°	3.5°	25°	25°	45°	45°
ft	lb					
40	12,500	11,500	-	-	-	-
45	12,500	11,500	-	-	-	-
50	12,500	11,500	-	-	-	-
55	12,500	11,500	12,500	11,500	-	-
60	12,500	11,500	12,500	11,500	10,000	10,000
65	12,500	11,500	12,100	11,100	9,800	9,700
70	12,500	11,500	11,700	10,300	9,600	9,500
75	12,500	10,900	11,400	9,700	9,400	9,200
80	11,700	10,300	11,000	9,100	9,200	8,600
85	10,700	9,800	10,700	8,500	9,100	8,200
90	9,800	8,600	10,100	8,000	8,900	7,700
95	9,000	8,000	9,300	7,600	8,800	7,300
100	8,200	7,600	8,600	7,100	8,700	6,900
105	7,300	7,100	7,900	6,800	8,000	6,600
110	6,500	6,700	7,200	6,400	7,400	6,200
115	5,700	6,300	6,400	6,100	6,800	6,000
120	5,000	6,000	5,600	5,800	6,000	5,700
125	4,400	5,400	5,000	5,500	5,200	5,400
130	3,800	4,800	4,400	5,200	4,600	5,200
135	3,300	4,300	3,800	4,700	4,000	4,800
140	2,800	3,800	3,300	4,100	-	-
145	2,400	3,300	2,800	3,600	-	-
150	2,000	2,900	2,300	3,200	-	-
155	1,600	2,500	1,900	2,800	-	-
160	1,300	2,200	1,500	2,400	-	-
165	-	1,900	1,100	2,000	-	-
170	-	1,500	-	-	-	-
175	-	1,300	-	-	-	-
180	-	-	-	-	-	-
185	-	-	-	-	-	-
1)	1	2	1	2	1	2

	151.7‘ (46.2 m) + 58.1‘ (17.7 m)					
	3.5°	3.5°	25°	25°	45°	45°
ft	lb					
40	-	-	-	-	-	-
45	-	-	-	-	-	-
50	7,600	7,200	-	-	-	-
55	7,600	7,200	-	-	-	-
60	7,600	7,200	-	-	-	-
65	7,600	7,200	-	-	-	-
70	7,600	7,200	6,500	6,500	-	-
75	7,600	7,200	6,300	6,300	-	-
80	7,600	7,200	6,200	6,100	5,000	-
85	7,600	7,200	6,000	5,900	4,900	4,900
90	7,600	7,200	5,900	5,800	4,800	4,800
95	7,300	7,000	5,700	5,600	4,700	4,700
100	7,100	6,500	5,600	5,500	4,600	4,500
105	6,900	6,100	5,400	5,400	4,500	4,500
110	6,700	5,800	5,300	5,300	4,400	4,400
115	6,200	5,400	5,200	5,100	4,300	4,300
120	5,500	5,100	5,000	4,800	4,200	4,200
125	4,900	4,800	4,900	4,600	4,100	4,100
130	4,300	4,600	4,700	4,300	4,100	4,100
135	3,800	4,300	4,600	4,100	4,000	4,000
140	3,300	4,100	4,200	3,900	4,000	3,800
145	2,800	3,700	3,700	3,700	3,900	3,700
150	2,400	3,400	3,200	3,500	3,700	3,500
155	2,100	3,000	2,800	3,400	3,200	3,300
160	1,700	2,600	2,300	3,200	2,700	3,200
165	1,400	2,300	1,900	2,800	-	-
170	1,100	2,000	1,600	2,400	-	-
175	-	1,700	1,200	2,100	-	-
180	-	1,400	-	1,700	-	-
185	-	1,200	-	1,400	-	-
1)	1	2	1	2	1	2

1) Telescopic mode

SMART CW

SMART CW2

Fully extended – 360° – SMART CW2

24,700 lb (11.2 t) | 23‘ 11-3/8“ (7.3 m) spread | 360°

	120.3‘ (36.7 m) + 33.2‘ (10.1 m)					
	3.5°	3.5°	25°	25°	45°	45°
ft	lb					
30	14,600	14,600	-	-	-	-
35	14,600	14,600	-	-	-	-
40	14,600	14,600	14,400	-	-	-
45	14,600	14,600	13,800	13,600	-	-
50	14,600	14,600	13,200	13,000	10,400	10,400
55	14,600	14,600	12,700	12,500	10,200	10,100
60	14,600	14,400	12,200	12,000	9,900	9,800
65	14,600	13,400	11,800	11,600	9,700	9,600
70	14,600	12,600	11,400	11,200	9,500	9,400
75	13,900	12,400	11,000	10,800	9,300	9,200
80	12,800	11,700	10,700	10,500	9,200	9,100
85	11,500	11,000	10,400	10,200	9,000	8,900
90	10,200	10,300	10,100	9,900	8,900	8,800
95	9,000	9,800	9,800	9,700	8,800	8,700
100	8,000	9,300	8,700	9,200	8,700	8,600
105	7,000	8,800	7,700	8,700	8,000	8,500
110	6,200	8,300	6,800	8,300	7,100	8,300
115	5,400	7,600	6,000	7,900	6,200	7,900
120	4,800	6,900	5,200	7,300	-	-
125	4,100	6,300	4,500	6,600	-	-
130	3,600	5,800	3,900	6,000	-	-
135	3,100	5,200	3,300	5,400	-	-
140	2,600	4,700	-	-	-	-
145	2,200	4,300	-	-	-	-
150	-	-	-	-	-	-
155	-	-	-	-	-	-
160	-	-	-	-	-	-
165	-	-	-	-	-	-
170	-	-	-	-	-	-
1)	1	2	1	2	1	2

	120.3‘ (36.7 m) + 58.1‘ (17.7 m)					
	3.5°	3.5°	25°	25°	45°	45°
ft	lb					
30	-	-	-	-	-	-
35	-	-	-	-	-	-
40	9,900	8,700	-	-	-	-
45	9,900	8,700	-	-	-	-
50	9,900	8,700	-	-	-	-
55	9,900	8,700	-	-	-	-
60	9,900	8,700	7,200	7,000	-	-
65	9,600	8,700	7,000	6,800	-	-
70	9,100	8,700	6,700	6,500	5,300	5,300
75	8,700	8,400	6,500	6,300	5,200	5,100
80	8,300	8,000	6,300	6,200	5,000	5,000
85	8,000	7,700	6,100	6,000	4,900	4,800
90	7,700	7,400	5,800	5,800	4,700	4,700
95	7,400	7,100	5,600	5,500	4,600	4,600
100	7,100	6,900	5,400	5,300	4,500	4,500
105	6,800	6,600	5,200	5,200	4,400	4,400
110	6,600	6,400	5,100	5,000	4,300	4,300
115	6,400	6,200	4,900	4,900	4,300	4,200
120	5,700	6,000	4,800	4,700	4,200	4,100
125	5,100	5,800	4,600	4,600	4,100	4,100
130	4,500	5,600	4,500	4,500	4,100	4,000
135	4,000	5,300	4,400	4,300	4,000	4,000
140	3,500	5,100	4,100	4,300	4,000	4,000
145	3,000	4,900	3,600	4,200	-	-
150	2,600	4,400	3,100	4,100	-	-
155	2,200	4,100	2,600	4,000	-	-
160	1,900	3,700	2,200	3,900	-	-
165	1,500	3,400	-	-	-	-
170	1,200	3,100	-	-	-	-
1)	1	2	1	2	1	2

1) Telescopic mode

SMART CW

SMART CW2

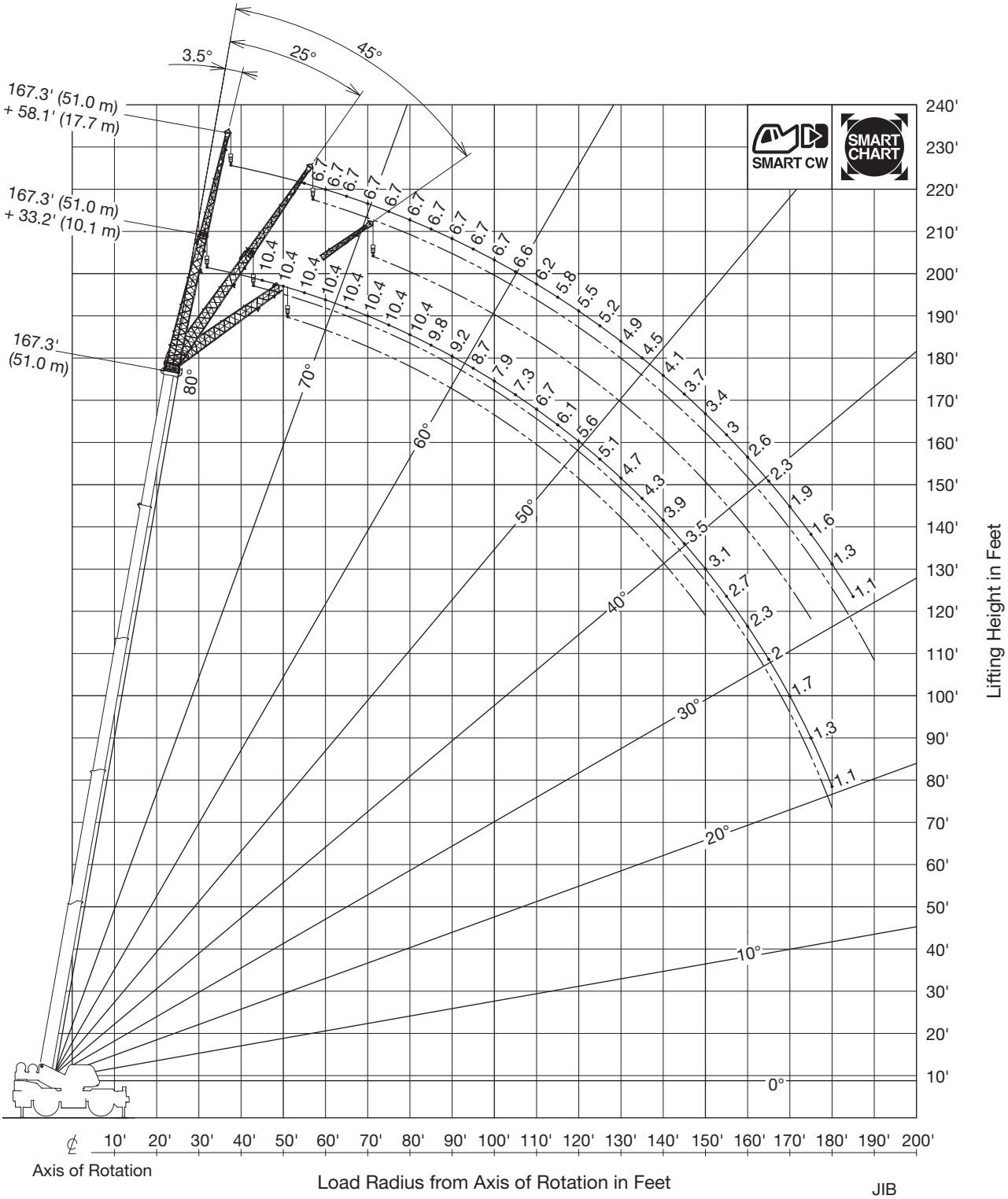

JIB

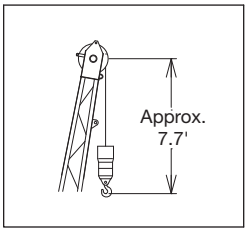

NOTE:

Jib geometry shown are for unloaded condition and machine standing level on firm supporting surface.
Boom deflection and subsequent radius and boom angle change must be accounted for when applying load to hook.

Fully extended – Smart Chart / SMART CW2

24,700 lb (11.2 t) **23‘ 11-3/8“ (7.3 m) spread**

	167.3‘ (51 m) + 33.2‘ (10.1 m)		
	3.5°	25°	45°
ft	lb		
45	10,400	-	-
50	10,400	-	-
55	10,400	-	-
60	10,400	10,400	-
65	10,400	10,400	9,800
70	10,400	10,400	9,600
75	10,400	10,200	9,400
80	10,400	9,500	9,000
85	9,800	9,000	8,500
90	9,200	8,500	8,100
95	8,700	8,000	7,700
100	7,900	7,600	7,300
105	7,300	7,200	6,900
110	6,700	6,800	6,600
115	6,100	6,500	6,300
120	5,600	5,900	6,000
125	5,100	5,400	5,600
130	4,700	5,000	5,100
135	4,300	4,600	4,700
140	3,900	4,200	4,300
145	3,500	3,800	3,900
150	3,100	3,400	3,500
155	2,700	3,100	-
160	2,300	2,700	-
165	2,000	2,300	-
170	1,700	1,900	-
175	1,300	1,500	-
180	1,100	1,200	-
185	-	-	-
190	-	-	-
1)	1, 2	1, 2	1, 2

	167.3‘ (51 m) + 58.1‘ (17.7 m)		
	3.5°	25°	45°
ft	lb		
45	-	-	-
50	-	-	-
55	6,700	-	-
60	6,700	-	-
65	6,700	-	-
70	6,700	-	-
75	6,700	6,200	-
80	6,700	6,100	-
85	6,700	5,900	-
90	6,700	5,800	4,800
95	6,700	5,600	4,700
100	6,700	5,500	4,600
105	6,600	5,400	4,500
110	6,200	5,300	4,400
115	5,800	5,200	4,300
120	5,500	5,000	4,200
125	5,200	4,900	4,200
130	4,900	4,600	4,100
135	4,500	4,400	4,000
140	4,100	4,200	4,000
145	3,700	4,000	3,900
150	3,400	3,800	3,700
155	3,000	3,500	3,500
160	2,600	3,200	3,400
165	2,300	2,900	3,100
170	1,900	2,600	2,800
175	1,600	2,200	2,500
180	1,300	1,900	-
185	1,100	1,500	-
190	-	1,200	-
1)	1, 2	1, 2	1, 2

1) Telescopic mode

SMART CW — SMART CW2

SMART CHART — Smart Chart

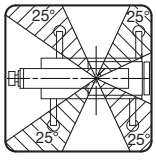

Fully extended – Smart Chart / SMART CW2

24,700 lb (11.2 t) **23‘ 11-3/8“ (7.3 m) spread**

	151.7‘ (46.2 m) + 33.2‘ (10.1 m)					
	3.5°	3.5°	25°	25°	45°	45°
ft	lb					
40	12,500	11,500	-	-	-	-
45	12,500	11,500	-	-	-	-
50	12,500	11,500	-	-	-	-
55	12,500	11,500	12,500	11,500	-	-
60	12,500	11,500	12,500	11,500	10,000	10,000
65	12,500	11,500	12,100	11,100	9,800	9,700
70	12,500	11,500	11,700	10,300	9,600	9,500
75	12,500	10,900	11,400	9,700	9,400	9,200
80	11,700	10,300	11,000	9,100	9,200	8,600
85	10,700	9,800	10,700	8,500	9,100	8,200
90	9,800	8,600	10,100	8,000	8,900	7,700
95	9,000	8,000	9,300	7,600	8,800	7,300
100	8,200	7,600	8,600	7,100	8,700	6,900
105	7,600	7,100	7,900	6,800	8,000	6,600
110	7,000	6,700	7,300	6,400	7,400	6,200
115	6,400	6,300	6,700	6,100	6,800	6,000
120	5,900	6,000	6,200	5,800	6,300	5,700
125	5,400	5,700	5,700	5,500	5,800	5,400
130	5,000	5,400	5,200	5,200	5,300	5,200
135	4,600	5,100	4,800	5,000	4,900	4,900
140	4,100	4,900	4,400	4,700	-	-
145	3,600	4,500	3,900	4,500	-	-
150	3,200	4,100	3,400	4,300	-	-
155	2,700	3,600	3,000	3,900	-	-
160	2,300	3,200	2,500	3,400	-	-
165	2,000	2,900	2,100	3,000	-	-
170	1,600	2,500	-	-	-	-
175	1,300	2,200	-	-	-	-
180	-	-	-	-	-	-
185	-	-	-	-	-	-
190	-	-	-	-	-	-
1)	1	2	1	2	1	2

	151.7‘ (46.2 m) + 58.1‘ (17.7 m)					
	3.5°	3.5°	25°	25°	45°	45°
ft	lb					
40	-	-	-	-	-	-
45	-	-	-	-	-	-
50	7,600	7,200	-	-	-	-
55	7,600	7,200	-	-	-	-
60	7,600	7,200	-	-	-	-
65	7,600	7,200	-	-	-	-
70	7,600	7,200	6,500	6,500	-	-
75	7,600	7,200	6,300	6,300	-	-
80	7,600	7,200	6,200	6,100	5,000	-
85	7,600	7,200	6,000	5,900	4,900	4,900
90	7,600	7,200	5,900	5,800	4,800	4,800
95	7,300	7,000	5,700	5,600	4,700	4,700
100	7,100	6,500	5,600	5,500	4,600	4,500
105	6,900	6,100	5,400	5,400	4,500	4,500
110	6,700	5,800	5,300	5,300	4,400	4,400
115	6,500	5,400	5,200	5,100	4,300	4,300
120	6,100	5,100	5,000	4,800	4,200	4,200
125	5,600	4,800	4,900	4,600	4,100	4,100
130	5,200	4,600	4,700	4,300	4,100	4,100
135	4,700	4,300	4,600	4,100	4,000	4,000
140	4,400	4,100	4,500	3,900	4,000	3,800
145	4,000	3,900	4,400	3,700	3,900	3,700
150	3,700	3,700	4,100	3,500	3,900	3,500
155	3,200	3,500	3,700	3,400	3,800	3,300
160	2,800	3,300	3,400	3,200	3,500	3,200
165	2,500	3,100	3,100	3,100	-	-
170	2,100	3,000	2,700	2,900	-	-
175	1,800	2,700	2,300	2,800	-	-
180	-	2,400	1,900	2,700	-	-
185	-	2,100	1,600	2,300	-	-
190	-	1,800	1,200	2,000	-	-
1)	1	2	1	2	1	2

1) Telescopic mode

SMART CW — SMART CW2

SMART CHART — Smart Chart

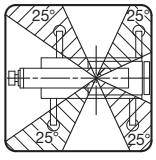

Fully extended – Smart Chart / SMART CW2

24,700 lb (11.2 t) 23‘ 11-3/8“ (7.3 m) spread

	120.3‘ (36.7 m) + 33.2‘ (10.1 m)					
	3.5°	3.5°	25°	25°	45°	45°
ft	lb					
30	14,600	14,600	-	-	-	-
35	14,600	14,600	-	-	-	-
40	14,600	14,600	14,400	-	-	-
45	14,600	14,600	13,800	13,600	-	-
50	14,600	14,600	13,200	13,000	10,400	10,400
55	14,600	14,600	12,700	12,500	10,200	10,100
60	14,600	14,400	12,200	12,000	9,900	9,800
65	14,600	13,400	11,800	11,600	9,700	9,600
70	14,600	12,600	11,400	11,200	9,500	9,400
75	13,900	12,400	11,000	10,800	9,300	9,200
80	12,800	11,700	10,700	10,500	9,200	9,100
85	11,700	11,000	10,400	10,200	9,000	8,900
90	10,800	10,300	10,100	9,900	8,900	8,800
95	10,000	9,800	9,900	9,700	8,800	8,700
100	9,200	9,300	9,400	9,200	8,700	8,600
105	8,500	8,800	8,700	8,700	8,600	8,500
110	7,900	8,300	8,100	8,300	8,200	8,300
115	7,000	7,900	7,500	7,900	7,600	7,900
120	6,300	7,500	6,700	7,500	-	-
125	5,600	7,200	6,000	7,200	-	-
130	4,900	6,900	5,200	6,800	-	-
135	4,300	6,500	4,600	6,500	-	-
140	3,800	6,000	-	-	-	-
145	3,300	5,500	-	-	-	-
150	-	-	-	-	-	-
155	-	-	-	-	-	-
160	-	-	-	-	-	-
165	-	-	-	-	-	-
170	-	-	-	-	-	-
1)	1	2	1	2	1	2

	120.3‘ (36.7 m) + 58.1‘ (17.7 m)					
	3.5°	3.5°	25°	25°	45°	45°
ft	lb					
30	-	-	-	-	-	-
35	-	-	-	-	-	-
40	9,900	8,700	-	-	-	-
45	9,900	8,700	-	-	-	-
50	9,900	8,700	-	-	-	-
55	9,900	8,700	-	-	-	-
60	9,900	8,700	7,200	7,000	-	-
65	9,600	8,700	7,000	6,800	-	-
70	9,100	8,700	6,700	6,500	5,300	5,300
75	8,700	8,400	6,500	6,300	5,200	5,100
80	8,300	8,000	6,300	6,200	5,000	5,000
85	8,000	7,700	6,100	6,000	4,900	4,800
90	7,700	7,400	5,800	5,800	4,700	4,700
95	7,400	7,100	5,600	5,500	4,600	4,600
100	7,100	6,900	5,400	5,300	4,500	4,500
105	6,800	6,600	5,200	5,200	4,400	4,400
110	6,600	6,400	5,100	5,000	4,300	4,300
115	6,400	6,200	4,900	4,900	4,300	4,200
120	6,100	6,000	4,800	4,700	4,200	4,100
125	5,900	5,800	4,600	4,600	4,100	4,100
130	5,600	5,600	4,500	4,500	4,100	4,000
135	5,200	5,300	4,400	4,300	4,000	4,000
140	4,700	5,100	4,300	4,300	4,000	4,000
145	4,200	5,000	4,200	4,200	-	-
150	3,700	4,800	4,100	4,100	-	-
155	3,300	4,600	3,700	4,000	-	-
160	2,900	4,500	3,200	4,000	-	-
165	2,600	4,400	-	-	-	-
170	2,200	4,100	-	-	-	-
1)	1	2	1	2	1	2

1) Telescopic mode

SMART CW2

Smart Chart

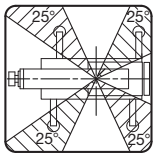

Warning and Operating Instructions for Lifting Capacity

GENERAL

1. RATED LIFTING CAPACITIES apply only to the machine as originally manufactured and normally equipped by Tadano Ltd. Modifications to the machine or use of optional equipment other than that specified can result in a reduction of capacity.
2. Hydraulic cranes can be hazardous if improperly operated or maintained. Operation and maintenance of this machine must be in compliance with this Operation and Maintenance Manual and any local regulations. Replacement manuals can be ordered from a Tadano distributor or dealer.
3. The operator and other personnel associated with this machine shall fully acquaint themselves with the applicable crane safety regulations and voluntary standards for the country where the crane will be operated.

SET UP

1. The rated lifting capacity tables provide the maximum allowable crane capacities and are based on the machine standing level on firm supporting surface under ideal job conditions. Depending on the nature of the supporting surface, it may be necessary to have structural supports under the outrigger floats (or under the tires if applicable to your crane) to spread the loads to a larger surface area.
2. Outriggers must always be properly extended with pin installed in each and the tires must not be in contact with the supporting surface before operating crane.

OPERATION

1. Rated lifting capacities have been tested to and meet minimum requirements of SAE J1063-Cantilevered Boom Crane Structures Method of Test. Rated lifting capacities do not exceed 85% of the tipping load on outriggers fully extended as determined by SAE J765-Crane Stability Test Code.
2. Rated lifting capacities for partially extended outriggers are determined from the formula, rated lifting capacities = (tipping load - 0.1 × tip reaction) / 1.25.
3. Rated lifting capacities are based on actual load radius increased by boom deflection.
4. The weight of handling device such as hook blocks, slings, etc., must be included as part of the load and must be deducted from the lifting capacity.
5. Rated lifting capacities are based on freely suspended loads and make no allowance for such factors as the effect of wind, sudden stopping of loads, supporting surface conditions, outrigger stability, tire inflation pressures (if applicable to your crane) operating speeds, side loads, etc. Side pull on boom or jib is extremely dangerous.
   Such action can damage the boom, jib or slewing mechanism, and lead to overturning of the crane.
6. Rated lifting capacities do not account for wind on lifted load or boom. We recommend against working under the condition that. During boom lift, consider that the rated lifting capacity is reduced by 50% when the wind speed is
   20 mph (9 m/s) to 27 mph (12 m/s); reduced by 70% when the wind speed is 27 mph (12 m/s) to 31 mph (14 m/s). If the wind speed is 31 mph (14 m/s) or over, stop operation.
   During jib lift, stop operation if the wind speed is 20 mph (9 m/s) or over.
7. Never exceed the rated lifting capacity for a given load radius. Do not risk a tip over by attempting to exceed the rated lifting capacity for the machine configuration. Stop lifting and lower the load if any outrigger is not in contact with the ground.
8. Do not operate at boom lengths, radii, or boom angle, where no capacities are shown in the rated capacity lifting tables. Crane may overturn without any load on the hook.
9. When boom length is between values listed, refer to the rated lifting capacities of the next longer and next shorter booms for the same radius. Always use the lesser of the two rated lifting capacity values.
10. When the desired load radius for a lift is between two load radii listed in a lifting capacity table, always use the allowable capacity for the longer radius.
11. Load per line should not exceed 14,600 lb (6,600 kg) for main winch and auxiliary winch.
12. Check the actual number of parts of line matches with LOAD MOMENT INDICATOR (AML-E2) before operation. Maximum lifting capacity is restricted by the number of parts of line of LOAD MOMENT INDICATOR (AML-E2). Limited capacity is as determined from the formula, single line pull for main winch 14,600 lb (6,600 kg) × number of parts of line.
13. The boom angle before loading should be greater to account for deflection. For rated lifting capacities, the loaded boom angle and the load radius is for reference only.
14. The 42.0‘ (12.8 m) boom length capacities are based on boom fully retracted. If not fully retracted [less than 57.7‘ (17.6 m) boom length], use the rated lifting capacities for the 57.7‘ (17.6 m) boom length.
15. Extension or retraction of the boom with loads may be attempted within the limits of the RATED LIFTING CAPACITIES.
    The ability to telescope loads is limited by several factors including but not limited to: hydraulic pressure, boom angle, boom length, crane maintenance.
    For lifting capacity of single top, deduct the weight of the load handling equipment from the rated lifting capacity of the boom.
16. For the lifting capacity of single top, the net capacity shall not exceed 14,600 lb (6,600 kg) including the main boom hook mass attached to the boom.
17. When the base jib or top jib or both jibs are removed, set the jib state switch to the DISMOUNTED position.
18. When erecting and stowing jib, always use ropes or straps to prevent jib from moving.
19. Use ”ANTI-TWO-BLOCK“ disable switch when erecting and stowing jib and when stowing hook block. While the switch is pushed, the hoist does not stop, even if an overwind condition occurs.
20. When lifting a load by using jib (aux. winch) and boom (main winch) simultaneously, do the following:
    – Enter the operation status as jib operation, not as boom operation.
    – Before starting operation, make sure that mass of load is within rated lifting capacity for jib.
21. Before telescoping the boom, set the telescoping mode selector switch to mode 1 or mode 2 with the boom fully retracted or fully extended. A change of the telescoping mode is not permissible when the boom has been partially .
22. Crane operation is prohibited without full counterweight 24,700 lb (11.2 ton) installed. Outriggers shall be fully extended 23‘ 11-3/8” (7.3 m) spread when installing or removing counterweight.

DEFINITIONS

1. Load radius: The horizontal distance between the center of rotation and center of the hook block.
2. Loaded boom angle: The angle between the boom base section and the horizontal, after lifting the rated lifting capacity at the load radius.
3. Working area: Area measured in a circular arc about the centerline of rotation.
4. Freely suspended load: Load hanging free with no direct external force applied except by the hoist line.
5. Side load: Horizontal side force applied to the lifted load either on the ground or in the air.

Warning and Operating Instructions
Notes for on Rubber Lifting Capacities

1. Rated lifting capacities on-rubber are in pounds and do not exceed 75% of tipping loads as determined by SAE J765-Crane Stability Test Code.
2. Rated lifting capacities shown in the chart are based on condition that crane is set on firm level surfaces with suspension-lock applied. They are based on actual load radius increased by tire deformation and boom deflection.
3. If the suspension-lock cylinders contain air, the axle will not be locked completely and rated lifting capacities may not be obtainable. Bleed the cylinders according to the operation safety and maintenance manual.
4. Rated lifting capacities are based on proper tire inflation, capacity and condition. Damaged tires are hazardous to safe operation of crane.
5. Tires shall be inflated to correct air pressure. Tires: 26.5R25☆☆ – air pressure: 94 psi (650 kPa).
6. Over front operation shall be performed within 2 degrees in front of chassis.
7. On-rubber lifting with "jib" is not permitted. Maximum permissible boom length is 104.7 ft (31.9 m).
8. When making lift on-rubber stationary, set parking brake.
9. For creep operation, boom must be centered over front of machine, slewing lock engaged, and load restrained from slewing. Travel slowly and keep the lifted load as close to the ground as possible, and especially avoid any abrupt steering, accelerating or braking.
10. Do not operate the crane while carrying the load.
11. Creep is motion for crane not to travel more than 200 ft (60 m) in any 30 minute period and to travel at the speed of less than 1 mph (1.6 km/h).
12. For creep operation, choose shift switch according to the road or working condition.

Notes for Load Moment Indicator (AML-E2)

1. Set AML select keys in accordance with the actually operating crane conditions and don't fail to make sure, before crane operation, that the displays on front panel are correct.
2. When operating crane on outriggers:
   - Set "P.T.O." switch to "ON".
   - Press the outrigger state select key to register for the outrigger operation. If the display agrees with the actual state, press the set key to register. After the completion of the registration, the display returns to the crane operation status.
   - Press the counterweight state select key to register for the counterweight state. If the display agrees with the actual state, press the set key to register. After the completion of the registration, the display returns to the crane operation status.
   - Press the lift state select key to register the lift state to be used (single top/jib/boom).
   - Each time the lift state select key is pressed, the display changes. If the display agrees with the actual state, press the set key to register. After the completion of the registration, the display returns to the crane operation status.
   - When erecting and stowing jib, select the status of jib set (jib state indicative symbol lights up).
3. When operating crane on-rubber:
   - Set "P.T.O." switch to "ON".
   - Press the outrigger state select key to register for the on-rubber operation. Each time the outrigger state select key is pressed, the display changes. Select the creep operation, the allow is displayed to the right of the on rubber state indicator symbol.
   - Press the lift state select key to register the lift state.

   However, pay attention to the following.

   (1) For stationary operation.
   - The front capacities are attainable only when the over front position symbol comes on. When the boom is more than 2 degrees from centered over front of chassis, 360° capacities are in effect.
   - When a load is lifted in the front position and then slewed to the side area, make sure the value of the LOAD MOMENT INDICATOR (AML-E2) is below the 360° lifting capacity.

   (2) For creep operation.
   - The creep capacities are attainable only when boom is in the straight forward position of chassis and the over front position symbol is on. If boom is not in the straight forward position of chassis, never lift load.
4. This machine is equipped with an automatic slewing stopping device (for the details, see operation manual). But, operate very carefully because the automatic slewing stop does not work in the following cases.
   - During on-rubber operation.
   - When the "P.T.O." switch is set to "OVERRIDE" and the "OVERRIDE" key switch outside the cab is on.
5. During crane operation, make sure that the displays on front panel are in accordance with actual operating conditions.
6. The displayed values of LOAD MOMENT INDICATOR (AML-E2) are based on freely suspended loads and make no allowance for such factors as the effect of wind, sudden stopping of loads, supporting surface conditions, inflation of tire, operating speed, side loads, etc. For safe operation, it is recommended when extending and lowering boom or slewing, lifting loads shall be appropriately reduced.
7. LOAD MOMENT INDICATOR (AML-E2) is intended as an aid to the operator. Under no condition should it be relied upon to replace use of capacity charts and operating instruction. Sole reliance upon LOAD MOMENT INDICATOR (AML-E2) aids in place of good operating practice can cause an accident.
   The operator must exercise caution to assure safety.
8. The lifting capacity differs depending on the outrigger extension width and slewing position.
   Work with the capacity corresponding to the outrigger extension width and slewing position.
   For the relationship among the outrigger extension width, slewing position and lifting capacities, refer to the working area charts.

Notes

TECHNICAL DESCRIPTION

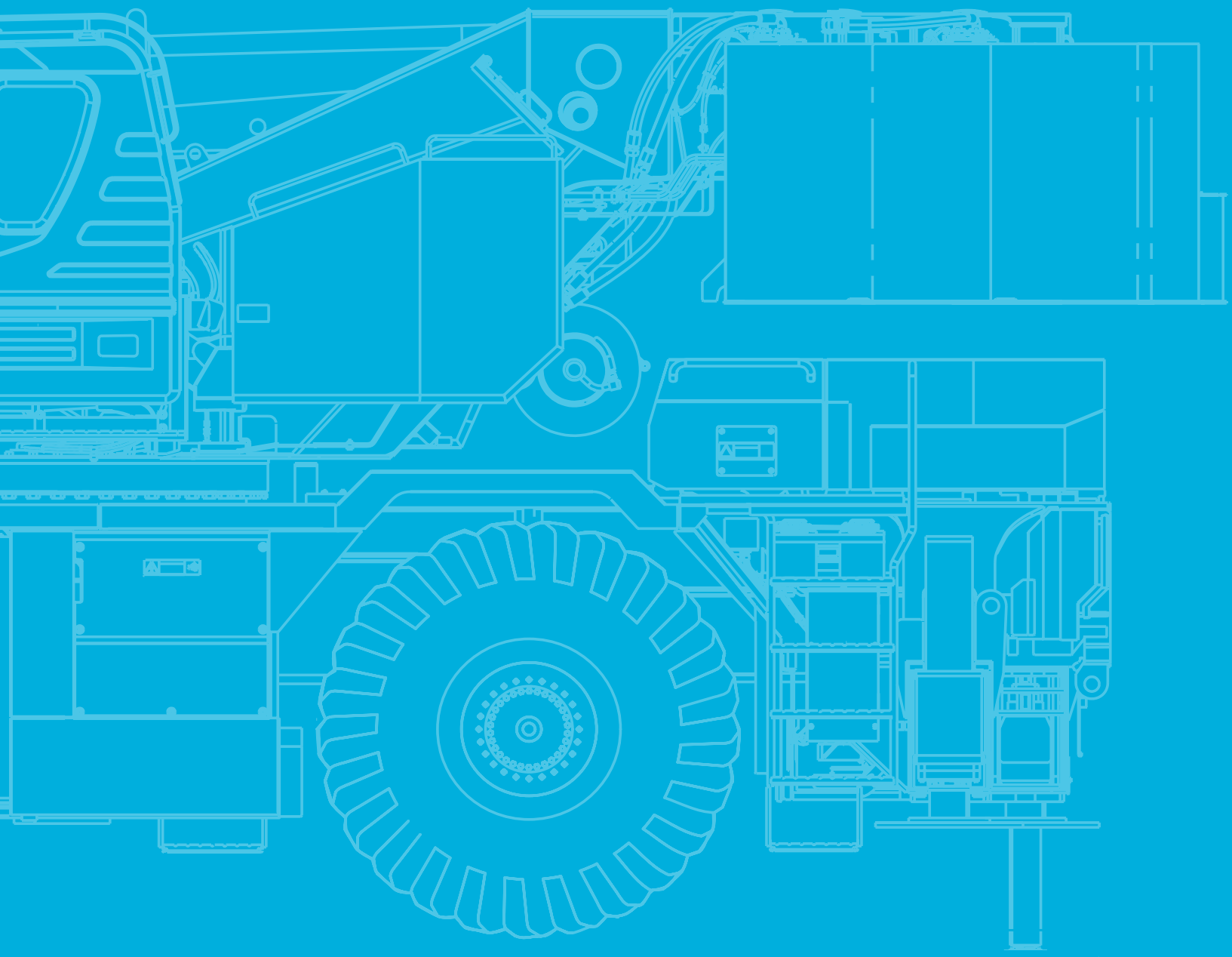

Technical Description

Crane specifications

Boom	5 section full power synchronized telescoping boom, 42.0‘ - 167.3‘ (12.8 m–51.0 m), of round box construction with 7 sheaves, 17-5/16“ (0.44 m) root diameter, at boom head. The synchronization system consists of 2 telescope cylinders, an extension cable and retraction cable. Hydraulic cylinder fitted with holding valve. 2 easily removable wire rope guards, rope dead end provided on both sides of boom head. Boom telescope sections are supported by wear pads both vertically and horizontally. Extension speed 125.3’ (38.2 m) in 170 seconds.
Boom elevation	By a double acting hydraulic cylinder with holding valve. Elevation -1.5° - 80.5°, combination controls for hand or foot operation. Boom angle indicator. Automatic speed reduction and slow stop function. Boom raising speed 20° to 60° in 46 seconds.
Jib	2 stage bi-fold lattice type, 3.5°, 25° or 45° offset (tilt type). Single sheave, 15-5/8“ (0.396 m) root diameter, at the head of both jib sections. Stored alongside base boom section. Jib length is 33.2‘ (10.1 m) or 58.1‘ (17.7 m). Assistant cylinders for mounting and stowing, controlled at right side of superstructure. Self stowing jib mounting pins.
Auxiliary lifting sheave (single top)	Single sheave, 15-5/8“ (0.396 m) root diameter. Mounted to main boom head for single line work (stowable).
Anti-two block	Pendant type over-winding cut out device with audio-visual (FAILURE lamp/BUZZER) warning system.
Slewing	Hydraulic axial piston motor through planetary slewing speed reducer. Continuous 360° full circle slewing on ball bearing turn table at 1.5 min^{-1} {rpm}. Equipped with manually locked/released slewing brake. A 360° positive slewing lock for pick and carry and travel modes, manually engaged in cab. Twin slewing system: Free slewing or lock slewing controlled by selector switch on front console.
Winch	MAIN WINCH: Variable speed type with grooved drum driven by hydraulic axial piston motor through speed reducer. Power load lowering and raising. Equipped with automatic brake (neutral brake) and counterbalance valve. Controlled independently of auxiliary winch. Equipped with cable follower and drum rotation indicator. DRUM: Grooved 14-1/4“ (0.362 m) root diameter x 26-13/16“ (0.681 m) wide. Wire rope: 935‘ of 3/4“ diameter rope (285 m of 19 mm). Drum capacity: 1135‘ (346 m) 7 layers. Maximum single line pull: 1st layer 20,000 lb (9,090 kg). Maximum permissible line pull wire strength: 14,600 lb (6,600 kg). AUXILIARY WINCH: Variable speed type with grooved drum driven by hydraulic axial piston motor through speed reducer. Power load lowering and raising. Equipped with automatic brake (neutral brake) and counterbalance valve. Controlled independently of main winch. Equipped with cable follower and drum rotation indicator. DRUM: Grooved 14-1/4“ (0.362 m) root diameter x 26-13/16“ (0.681 m) wide. Wire rope: 482‘ of 3/4“ diameter rope (147 m of 19 mm). Drum capacity: 1135‘ (346 m) 7 layers. Maximum single line pull: 1st layer 20,000 lb (9,090 kg). Maximum permissible line pull wire strength: 14,600 lb (6,600 kg). WIRE ROPE: Non-rotating 3/4“ P·S (19) + 39 x P·7. Breaking strength 72,800 lb (33,000 kg).
Hook blocks	100 ton (90.7 metric ton) - 8 sheaves with swivel hook and safety latch, for 3/4“ (19 mm) wire rope. 7.3 ton (6.6 metric ton) - Weighted hook with swivel and safety latch, for 3/4“ (19 mm) wire rope.
Counterweight	Self-removable counterweight: 24,700 lb (11,200 kg).
Hydraulic system	PUMPS: 2 variable piston pumps for crane functions. Tandem gear pump for steering slewing and other hydraulic systems. Powered by electric motor. CONTROL VALVES: Electrically controlled multiple valves actuated by pilot pressure with integral pressure relief valves. RESERVOIR: 210 gallons (795 lit.) capacity. External sight level gauge. FILTRATION: BETA10 = 10 return filter, full flow with bypass protection, located inside of hydraulic reservoir. Accessible for easy replacement. OIL COOLER: Air cooled fan type.
Cab and controls	Both crane and drive operations can be performed from one cab mounted on rotating superstructure. 20° tilt, left side, 1 man type, steel construction with sliding door access and safety glass windows opening at side. Door window is powered control. Windshield glass window and roof glass window are shatter-resistant. Tilt-telescoping steering wheel. Adjustable control lever stands for slewing, boom elevating, boom telescoping, auxiliary winch and main winch. Control lever stands can change neutral positions and tilt for easy access to cab. 3 way adjustable operator‘s seat with high back, headrest and armrest. Foot operated controls: boom elevating boom telescoping, service brake and motor rotation. Hot water cab heater and air conditioning. Dash-mounted instrument panel, multi function display, starter switch (motor start/stop), 12 V power outlet, USB port, parking brake switch, steering mode select switch, power window switch, PTO switch (drive/crane), slewing brake switch, telescoping/auxiliary winch select switch, outrigger controls, free slewing/lock slewing selector switch, air conditioning control switch, stop switch, anti-two-block disable switch, boom elevation stop release switch, emergency crane operation switch, differential lock switch. Instruments panel: Air pressure, lithium ion battery level gauge, speedometer, power meter, ePTO rotation indicator, hour meter and odometer/tripmeter, cruising range. Multi function display: Lithium ion battery information monitor.

Technical Description

Crane specifications

Load Moment Indicator	Tadano electronic LOAD MOMENT INDICATOR system (AML-E2) including: Control lever lockout function with audible and visual pre-warning. Number of parts of line. Boom position indicator. Outrigger state indicator. Slewing angle. Boom angle / boom length / jib offset angle / jib length / load radius / rated lifting capacities / actual loads read out. Potential lifting height. Ratio of actual load moment to rated load moment indication. Automatic speed reduction and slow stop function on boom elevation and slewing. Working condition register switch. Load radius / boom angle / tip height / slewing range preset function. External warning lamp. Tare function. Main hydraulic oil pressure. Lithium ion battery information monitor. Main winch / auxiliary winch select. Drum rotation indicator (audible and visible type) main and auxiliary winch. On rubber indicator. AML-E2 monitors outrigger extended length and automatically programs the corresponding “RATED LIFTING CAPACITIES“ table. Operator‘s right hand console includes shift switch, slewing lock lever and sight level bubble. Upper console includes, roof washer and wiper switch, emergency outrigger set up key switch, jib equipped / removed select switch, high speed winch (main / aux.) switch, cab tilt switch, pump disconnect enable switch and boom emergency telescoping switch (2nd and 3rd-top), auto accel switch. *NOTE*: Each crane motion speed is based on unladen conditions.

Carrier specifications

Type	Front and rear motor, left hand steering, 4 x 4 front and rear drive.
Frame	High tensile steel, all welded mono-box construction.
Electric motor	Name: DANA TM4 LSM200C Type: AC synchronous motor Max. output: 97 kW {132 PS} + 97 kW {132 PS} / 2,750 min^{-1} {rpm} Max. torque: 2,500 N·m {255 kgf·m} + 2,500 N·m {255 kgf·m} / 250 min^{-1} {rpm}
Travel speed	11 mph (18 km/h).
Gradeability (tanθ)	40% (in short time), 20% (continuously).
Axle	Front: Full floating type, steering and driving axle with planetary reduction and inter-wheel differential lock. Rear: Full floating type, steering and driving axle with planetary reduction, inter-wheel differential lock and emergency steering gear box.
Steering	Hydraulic power steering controlled by steering wheel. Four steering modes available: 2 wheel front, 2 wheel rear, 4 wheel coordinated and 4 wheel crab.
Suspension	Front: Rigid mounted to frame. Rear: Pivot mounted with hydraulic lockout device.
Battery	Batteries for driving: Lithium ion battery, 6 packs, 332 V, 226 kWh (37.7 kWh / 1 pack).
Brake systems	Service: Air over hydraulic disc brakes on all 4 wheels. Parking / Emergency: Spring applied-air released brake acting on input shaft of front axle. Auxiliary: Regenerative brake.
Tires	26.5R25☆☆ - air pressure: 94 psi (650 kPa).
Outriggers	Four hydraulic, beam and jack outriggers. Vertical jack cylinders equipped with integral holding valve. Each outrigger beam and jack is controlled independently from cab. Beams extend to 23‘ 11-3/8“ (7.3 m) center-line and retract to within 10‘ 10-1/2“ (3.315 m) overall width with floats. Outrigger jack floats are attached thus eliminating the need of manually attaching and detaching them. Controls and sight bubble located in superstructure cab. Four outrigger extension lengths are provided with corresponding “RATED LIFTING CAPACITIES“ for crane duty in confined areas. Min. extension: 8‘ 10-1/4“ (2.7 m) center to center Mid. extension: 18‘ 1/2“ (5.5 m) center to center Mid. extension: 21‘ 11-3/4“ (6.7 m) center to center Max. extension: 23‘ 11-3/8“ (7.3 m) center to center Float size (diameter): 1‘ 11- 5/8“ (0.6 m)

Technical Description

Standard equipment

5 section full power partially synchronized boom	42.0‘-167.3‘ (12.8 m - 51.0 m)
Bi-fold lattice jib	Tilt type – 33.2‘ or 58.1‘ (10.1 m or 17.7 m) – with 3.5°, 25° or 45° pinned offsets and self storing pins.
Quick reeving type bi-fold jib	
Anti-two block device	Overwind cutout.
Winch drum camera	With light.
LED work lights	
Variable speed main winch	With grooved drum, cable follower, drum rotation indicator (audible, visible and thumper type) and 935‘ of 3/4“ cable.
Variable speed auxiliary winch	With grooved drum, cable follower, drum rotation indicator (audible, visible and thumper type) and 482‘ of 3/4“ cable.
Auxiliary lifting sheave	Single top, stowable.
2-speed winch	
Hook block	100 ton (90.7 metric ton) - 8 sheaves with swivel hook and safety latch for 3/4“ (19 mm) wire rope.
Hook	7.3 ton (6.6 metric ton) - with swivel.
Tadano twin slewing system and 360° positive slewing lock	
Positive control	
Hydraulic oil cooler	
3 way adjustable cloth seat	With armrests, high back and seat belt.
Tilt-telescoping steering wheel	
Tinted safety glass and sun visor	
Front windshield wiper and washer	
Roof window wiper and washer	
Power window	Cab door.
12 V power outlet	
Ashtray	
Cab floor mat	
PTO switch (drive/crane)	
Air conditioner	Hot water heater and cooler.
Full instrumentation package	
Self centering finger control levers	For electric signals.
Control pedals	For boom elevating and boom telescoping.
Cup holder	
Battery disconnect	
USB port	
20° tilt cab	
Wind speed indicator	
Emergency steering system	
Tadano electronic load moment indicator system (AML-E2)	
Boom angle indicator	
Outrigger extension length detector	
Electronic crane monitoring system	
Rear view camera	
Right front view camera	
Fenders	
Air dryer	
Complete highway light package	
Towing hooks	Front and rear.

Technical Description

Standard equipment

Hook block tie down	Front bumper.
Weighted hook storage compartment	
LED head lamp	
Independently controlled outriggers	
Four outrigger extension positions	
Self-storing outrigger pads	
Drive / steer	4 x 4 x 4.
Inter-wheel differential lock	
Automatic rear axle oscillation lockout system	
Tires	26.5R25☆☆ tires.
Disc brakes	
Back-up alarm	
24 volt electric system	
Tool storage compartment	
Tire inflation kit	
Lifting eyes	
Telematics	Machine data logging and monitoring system with HELLO-NET via internet (availability depends on countries).
Lithium ion battery information monitor	
Eco mode system	
Self-removable counterweight	
Clearance sonar	Rear side.
Automatic pump disconnect	
Over unwinding prevention	
Lift visualizer	
Emergency stop switch	
Normal charging cable	32.8‘ (10 m) + Extension 82‘ (25 m)

Optional equipment

Webasto heater	
Normal charging cable	114.8‘ (35 m)
Search light	
Aircraft warning light	

Charging methods / Charging power

Rapid charging	CCS1
Normal charging	480 V 3-phase AC
60A Breaker	48A (36.8 kw / 40 kVA)
50A Breaker	40A (30.6 kw / 33.2 kVA)
30A Breaker	24A (18.4 kw / 20 kVA)
20A Breaker	16A (12.3 kw / 13.4 kVA)
Can also work while plugged in	

tac.sales@tadano.com
www.tadanoamericas.com

Tadano Ltd.
Kanda square 18th Floor, 2-2-1 Kanda-Nishikicho, Chiyoda-ku, Tokyo 101-0054, Japan
Phone: +81-3-6811-7309 (International Division)

Tadano America Corporation
4242 West Greens Road, Houston, TX 77066
Phone: +1 (281) 869-0030 Fax: +1 (281) 869-0040

TADANO