Specifications

Vehicle dimensions

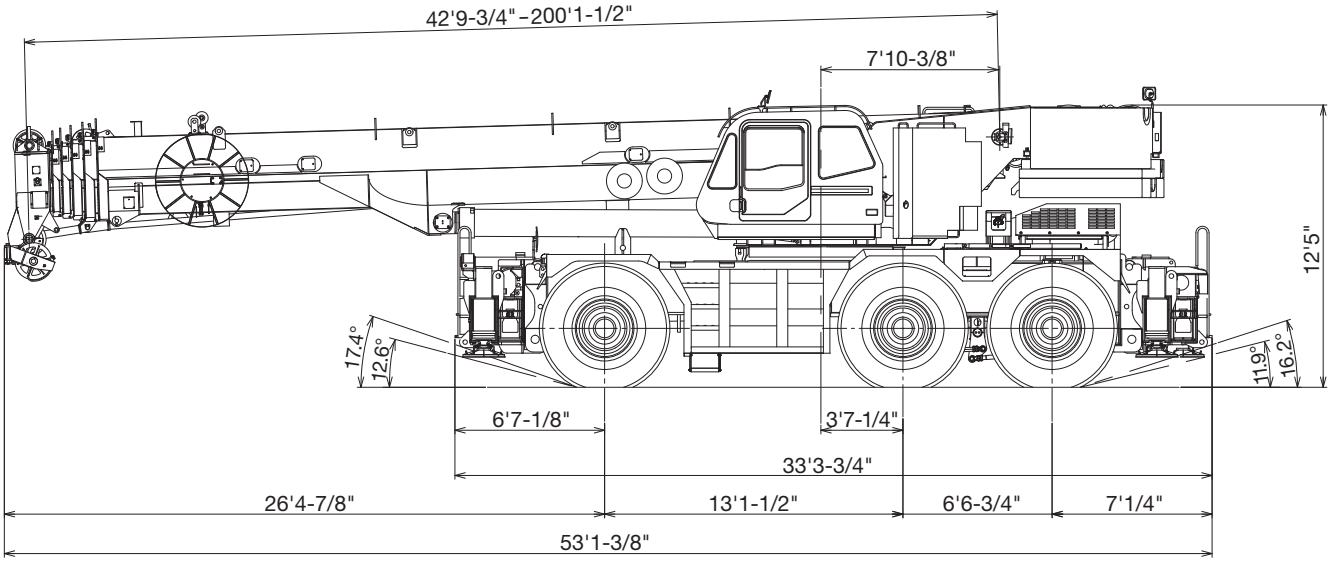

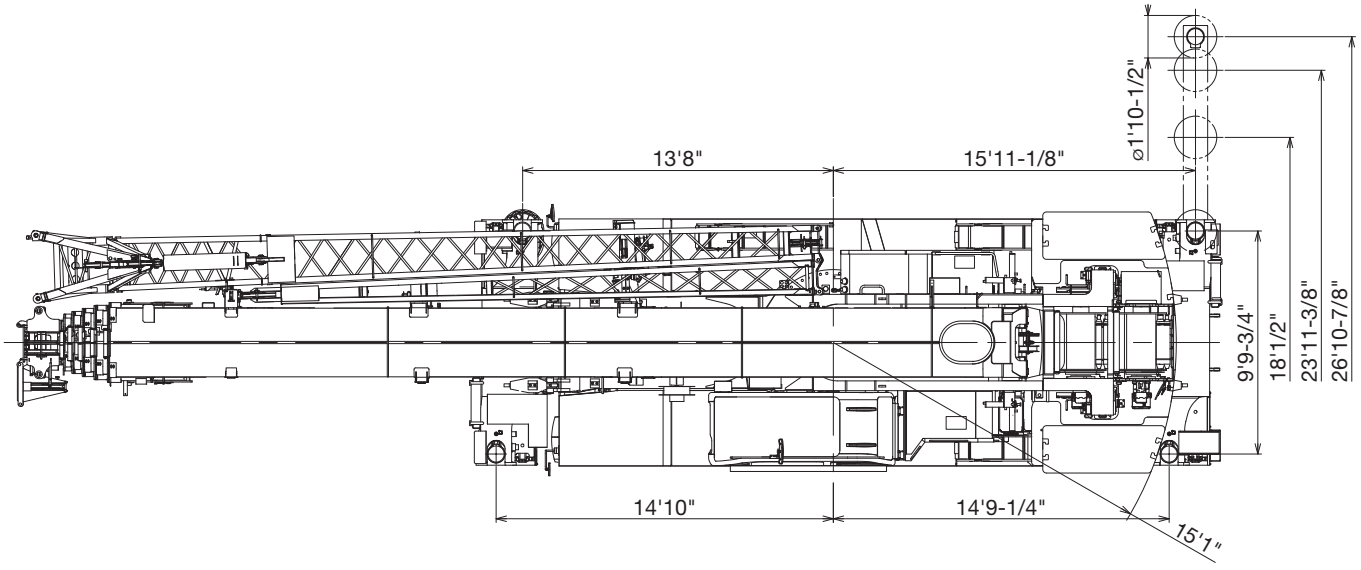

Dimension is with boom angle at -1.5 degree.

Specifications

Vehicle dimensions

Optional weight 24,500 lb

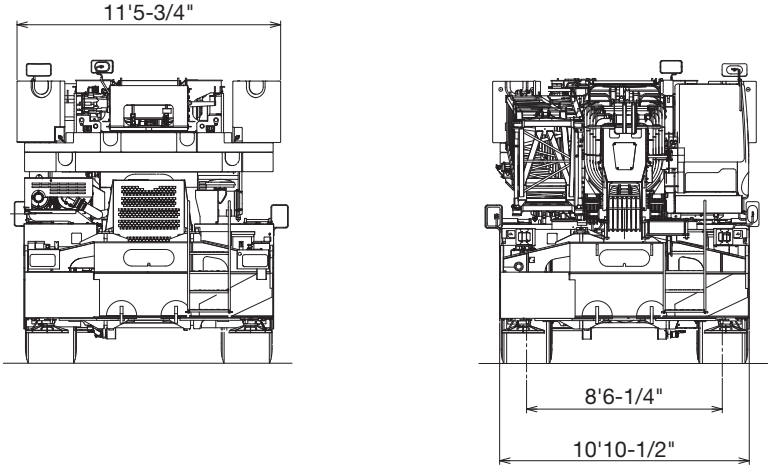

General dimensions

Overall length	approx. 53‘ 1-3/8“
Overall width	approx. 10‘ 10-1/2“
Overall height	approx. 12‘ 5“
Carrier length for traveling	approx. 27‘ 1-1/4“
6 wheel steer*	32‘ 6“
2 wheel steer*	48‘ 11“

* Turning radius (26.5R25☆☆ tires)