SE SERIES
wallboard cranes

SE SERIES

FASSI

LEADER IN INNOVATION

FASSI SE series

FEATURES

FX901 control system (1), 7" graphic color display with touchscreen technology. It displays detailed information concerning stabilization and crane working conditions.

FX900 (2), the digital brain that coordinates and manages the best operating conditions for performance and optimal machine control, as well as the crane's safety devices.

The new V7 radio control units (3) The new V7 RRC has a large graphic display for the remote control of the crane's functions and, on request, also has options regarding the vehicle and the stabilizers. Advanced control and command interface which makes the use of our cranes ever more precise and efficient.

FX500 Fassi electronic control (4) The FX500 electronically controls the load conditions of the crane and the hydraulic and manual winch extensions, specific to the particular crane model on which it is installed. The FX500 is also able to activate different work sectors, in relation to the stability of the crane and vehicle, as it is in use.

Digital RCS radio remote *control* (5) the digital radio remote control, exclusively compatible with the Fassi product, with wide graphic display to remotely control the functions of the crane and, optionally, the vehicle and the outriggers. It automatically researches the available frequency and allows for continuous interaction between operator and crane.

Automatic Dynamic Control (ADC), (6) control system automatically controlling the dynamics of all the crane functions maximizing the speed of movement depending on the handled load, allowing only controlled movements and minimizing the structural stress on both the crane and the frame/sub frame of the vehicle.

S900 Multifunction Distributor Bank (7)**,** High performances multifunction compensated distributor bank with very high "load-sensing" proportional multifunction ability; all crane functions are perfectly controlled, proportional and smooth. Ideal for the application on heavy range cranes.

D900 Digital Multifunction Distributor Bank (8)**,** High performances multifunction compensated hydraulic distributor bank with digital anti-saturation system thereby ensuring a superlative multifunction and proportional operation. Coupled with the Fassi XF (Extra Fast) system, it guarantees an extraordinary fluidity and speed of action.

	FX901	FX900	V7 RRC	FX500	RCS	ADC	S900	D900
F330SE				●	○	●	●	○
F360SE				●	○	●	●	○
F375SE				●	●	●		●
F390SE				●	○	●	●	○
F425SE				●	●	●		●
F600SE	●	●	●			●		●

● STANDARD ; ○ OPTION

5

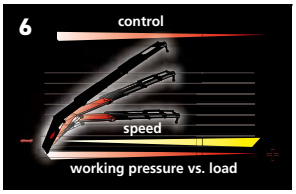

MADE TO ANSWER ALL DRYWALL DELIVERY SPECIALIST'S JOB SITE REQUIREMENTS

SE SERIE

STANDARD CONFIGURATION

1. Stability is of the highest priority! So all Fassi SE Cranes are standard with Extra-wide crane outriggers.

2. Superior protection of hose trays via an exclusive heavy duty metal tray system and high resistance nylon e-chain for fork and rotator functions.

3. Fork and rotator pipe hose connection is protected by a heavy-duty high impact ABS tree guard supported by stout steel skeleton and steel boom tip guard

4. Multi-Power Extension System ("MPES") for exceptionally smooth and fast extension/retraction speed of the telescope booms by means of equally powerful independent rams linked in parallel connection and activated by a single control.

5A. For the F390SE - F375SE - F360SE - F330SE models indisputably powerful rack & pinion rotation system with self centering guide shoe that assures constant connection between rack and column to reduce wear of the teeth while at the same time providing unparalleled control of the rotation on uneven ground.

5B. For F600SE and F425SE models, rotation on slew ring with hydraulic motor, designed for intensive use. Mechanically locked at 470° for F425SE and continuous rotation for F600SE.

6A. Industry's largest platform providing the operator plenty of room to get on and off the seat.

6B. Unencumbered operator view from the top seat for viewing far away load and fork. In-line Boom design allows accurate placement of load by provlding operator a clear view of boom tip.

7. Heavy duty. high impact thick ABS quard around the top-seat controls valves, supported by a stout steel skeleton to help prevent tree damage.

8. Industry's first and most reliable Rod Shield for the second lift ram to protect from clip damage.

9. Large rust free, baffled, thick walled nylon hydraulic tank for long life and sized to assist in oil cooling

10. Decagonal Section for F375SE - F425SE - F600SE models. All Three have a ten-sided section to ensure maximum rigidity.

11. Our oversized hydraulic oil cooler is the industry's largest and greatly, reduces leaks, failures, and down-time. This allows high performance and endurance for those big jobs.

12. Industry's first monitored automatic greasing system for all of the crane's pivoting point connections.

13. Top seat gives operators an ergonomic seat in a position of safety and complete control.

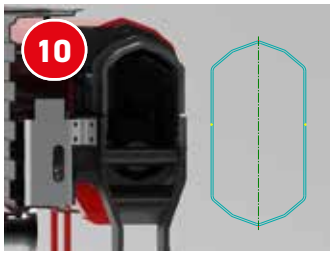

SE SERIE

EDGEMONT F425SE

F330SE.24

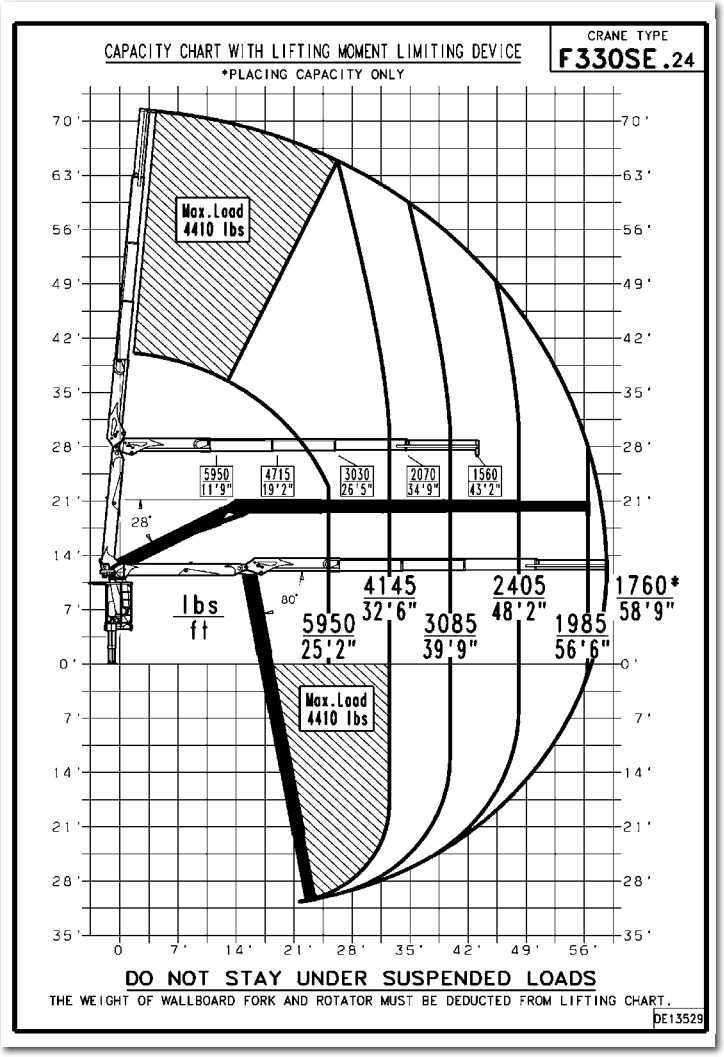

TECHNICAL DATA	F330SE.24
Lifting capacity	134534 lbs.ft
Standard reach	58'8" ft
Hydraulic extension	31'3" ft
Rotation arc	430°
Rotation torque	33923 lbs.ft
Working pressure	3626 psi
Pump capacity	16+16 gal/min
Oil tank capacity	66 gal
Outriggers spread crane	23'6" ft
Supplementary outriggers	-
Max Crane Angle	80°
*Weight	11095 lbs

TRUCK DATA	
SBA WB: 275"-295"	13.5k tag or pusher
SFA WB: 290" – 300"	(depending on state laws)
20k front axle	Full double frame
46k rear tandems	(RBM 3–3.2 million per rail)

CERTIFIED DYNAMIC PERFORMANCE Dynamic load diagrams calculated, tested and certified to lift the loads at the declared reaches unless indicated

*** Ground Control Crane Weight**

technical drawings

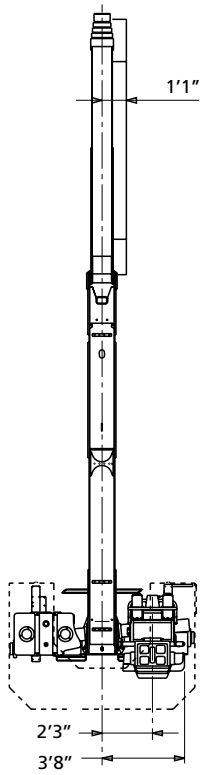

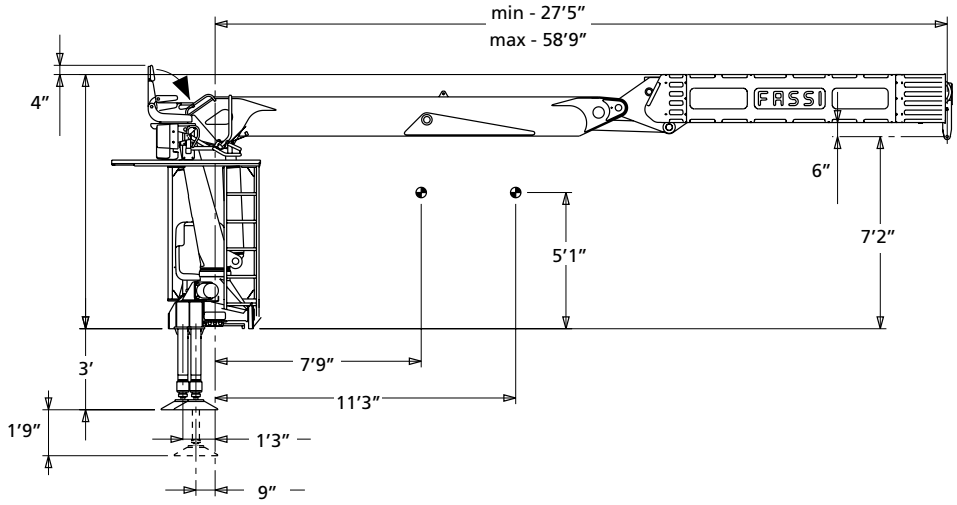

F360SE.24

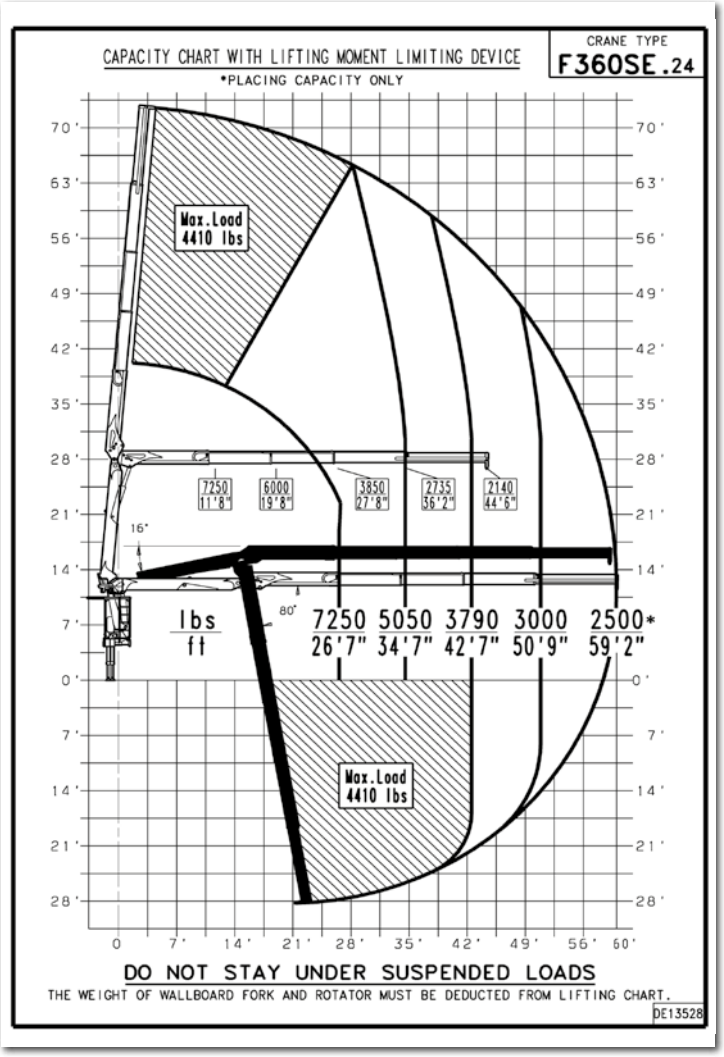

TECHNICAL DATA	F360SE.24
Lifting capacity	192398 lbs.ft
Standard reach	60'0'' ft
Hydraulic extension	32'7'' ft
Rotation arc	430°
Rotation torque	33923 lbs.ft
Working pressure	4351 psi
Pump capacity	16+16 gal/min
Oil tank capacity	66 gal
Outriggers spread crane	23'6'' ft
Supplementary outriggers	-
Max Crane Angle	80°
*Weight	11685 lbs

TRUCK DATA	
SBA WB: 275"-295"	13.5k tag or pusher
SFA WB: 290" – 300"	(depending on state laws)
20k front axle	Full double frame
46k rear tandems	(RBM 3–3.2 million per rail)

CERTIFIED DYNAMIC PERFORMANCE Dynamic load diagrams calculated, tested and certified to lift the loads at the declared reaches unless indicated

*** Ground Control Crane Weight**

technical drawings

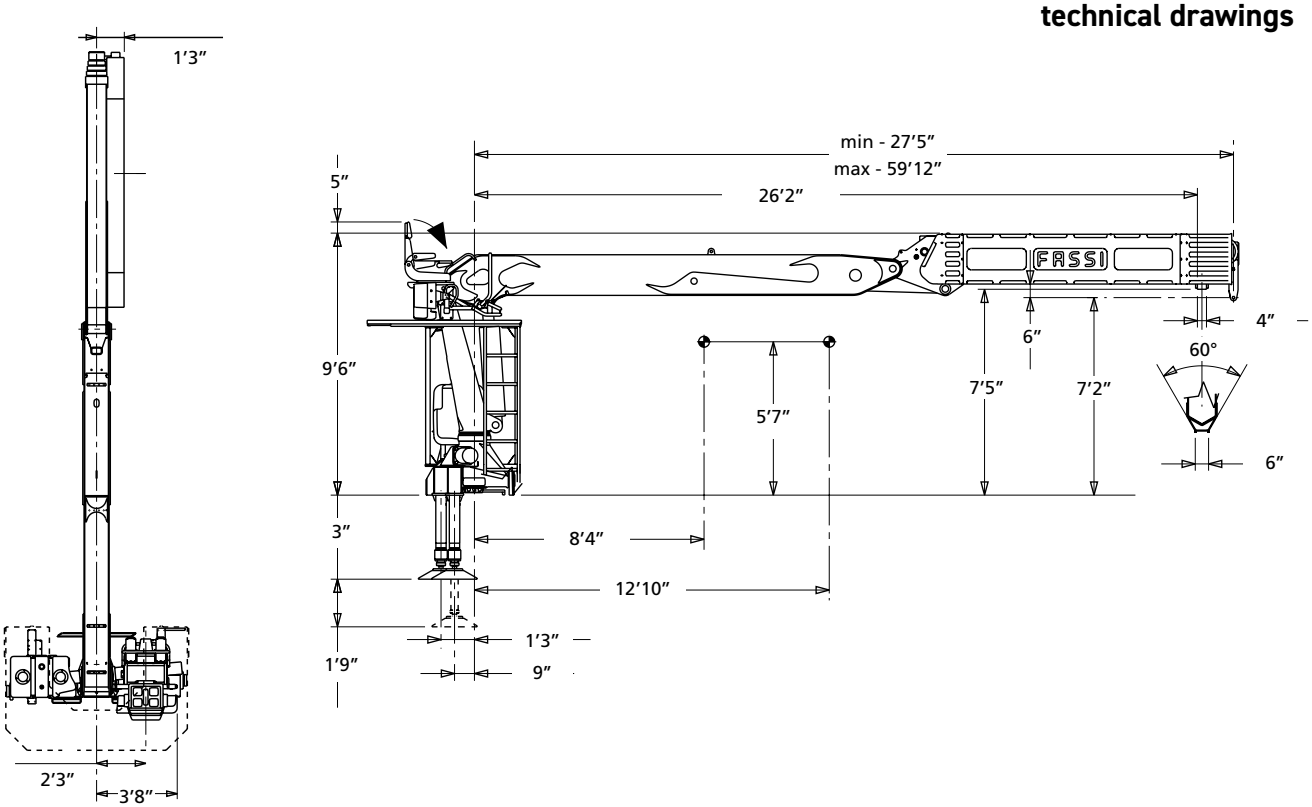

F375SE.13

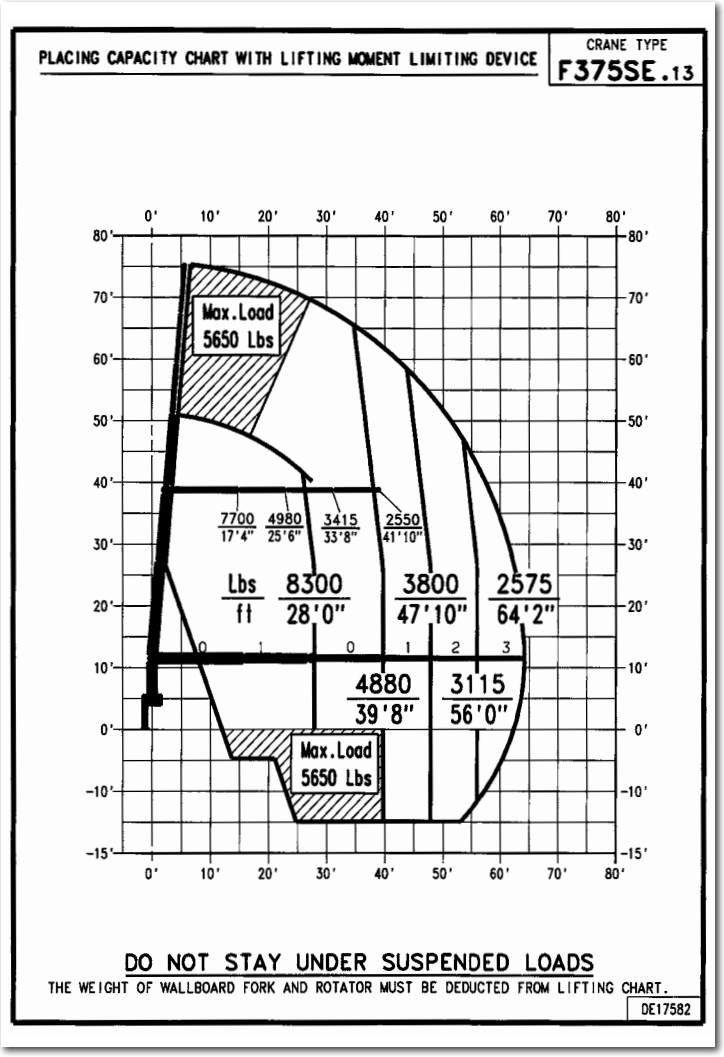

TECHNICAL DATA	F375SE.13
Lifting capacity	232641 lbs.ft
Standard reach	64'2" ft
Hydraulic extension	36'3" ft
Rotation arc	430°
Rotation torque	33928 lbs.ft
Working pressure	4714 psi
Pump capacity	21+21 gal/min
Oil tank capacity	66 gal
Outriggers spread crane	25'7" ft
Supplementary outriggers	7'7''
Max Crane Angle	82,5°
*Weight	10141 lbs

TRUCK DATA	
SBA WB: 275"-295"	13.5k tag or pusher
SFA WB: 290" – 300"	(depending on state laws)
20k front axle	Full double frame
46k rear tandems	(RBM 3–3.2 million per rail)

Crane belonging to the HC1 HD5 S2 class (if installed on truck) according to EN 12999:2011

*** Ground Control Crane Weight**

technical drawings

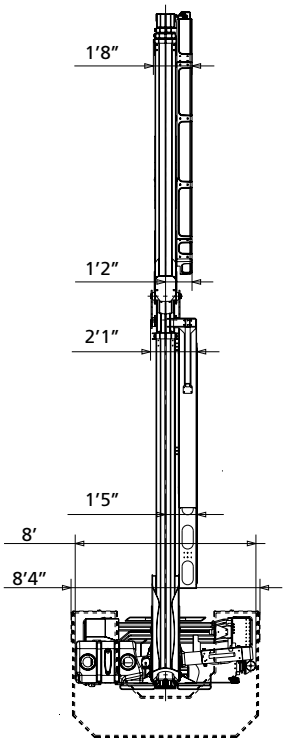

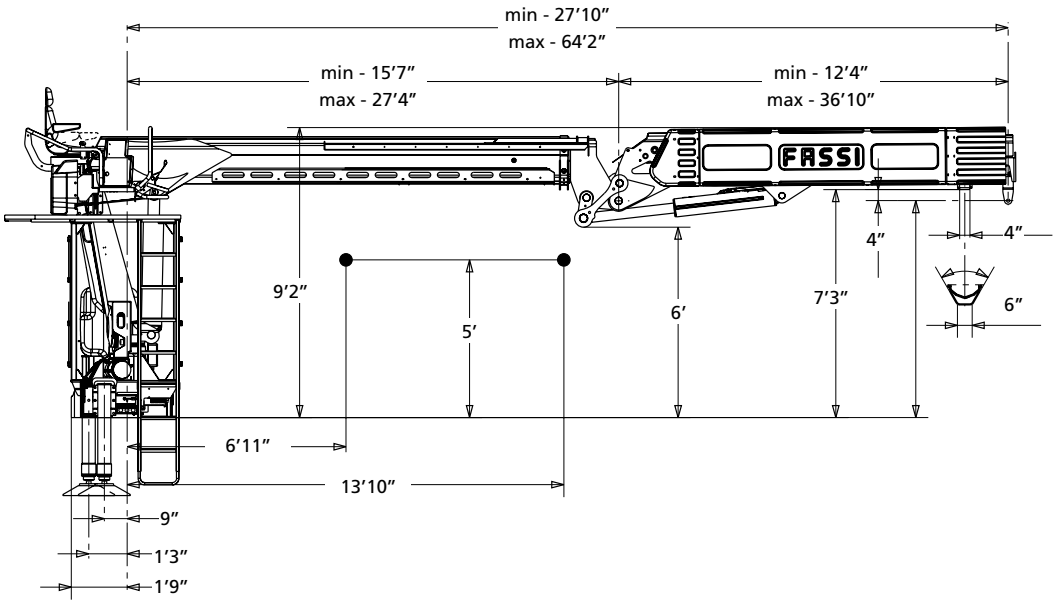

F375SE.14

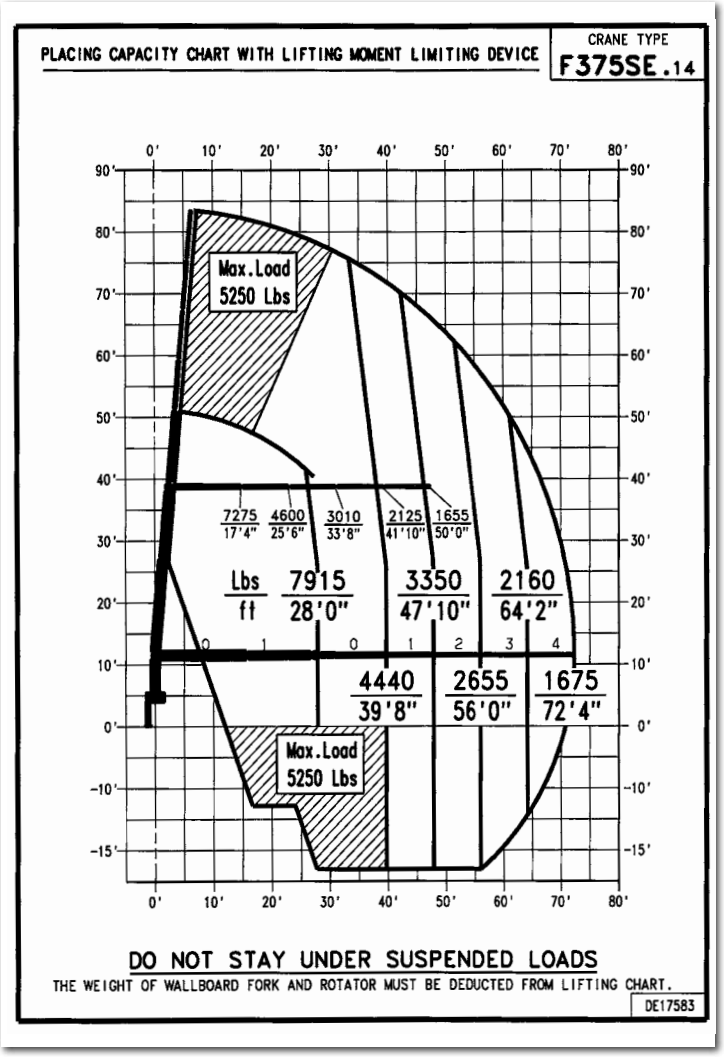

TECHNICAL DATA	F375SE.14
Lifting capacity	221821 lbs.ft
Standard reach	72'4'' ft
Hydraulic extension	44'5'' ft
Rotation arc	430°
Rotation torque	33928 lbs.ft
Working pressure	4714 psi
Pump capacity	21+21 gal/min
Oil tank capacity	66 gal
Outriggers spread crane	25'7'' ft
Supplementary outriggers	7'7''
Max Crane Angle	82,5°
*Weight	10692 lbs

TRUCK DATA	
SBA WB: 275"-295"	13.5k tag or pusher
SFA WB: 290" – 300"	(depending on state laws)
20k front axle	Full double frame
46k rear tandems	(RBM 3–3.2 million per rail)

Crane belonging to the HC1 HD5 S2 class (if installed on truck) according to EN 12999:2011

*** Ground Control Crane Weight**

technical drawings

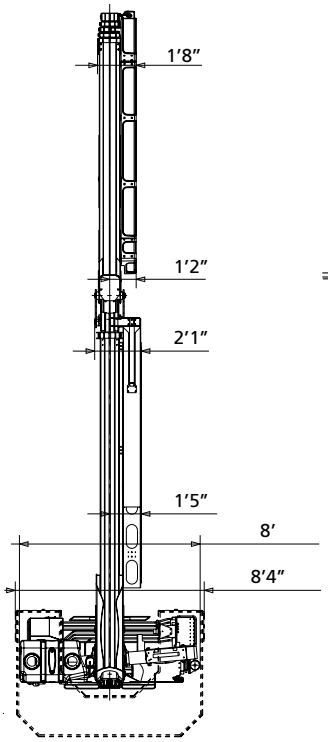

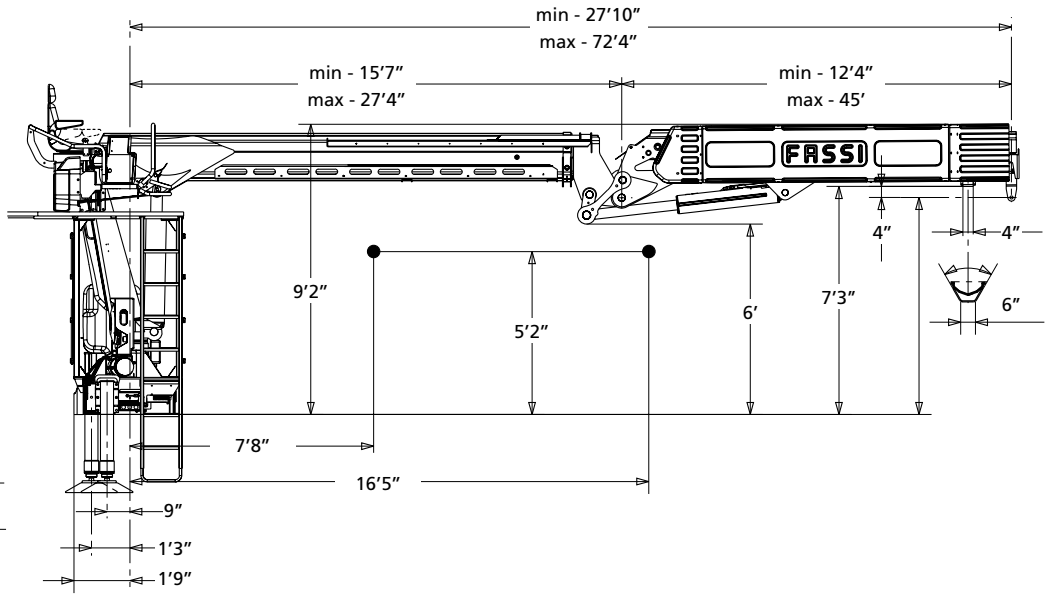

F425SE.04

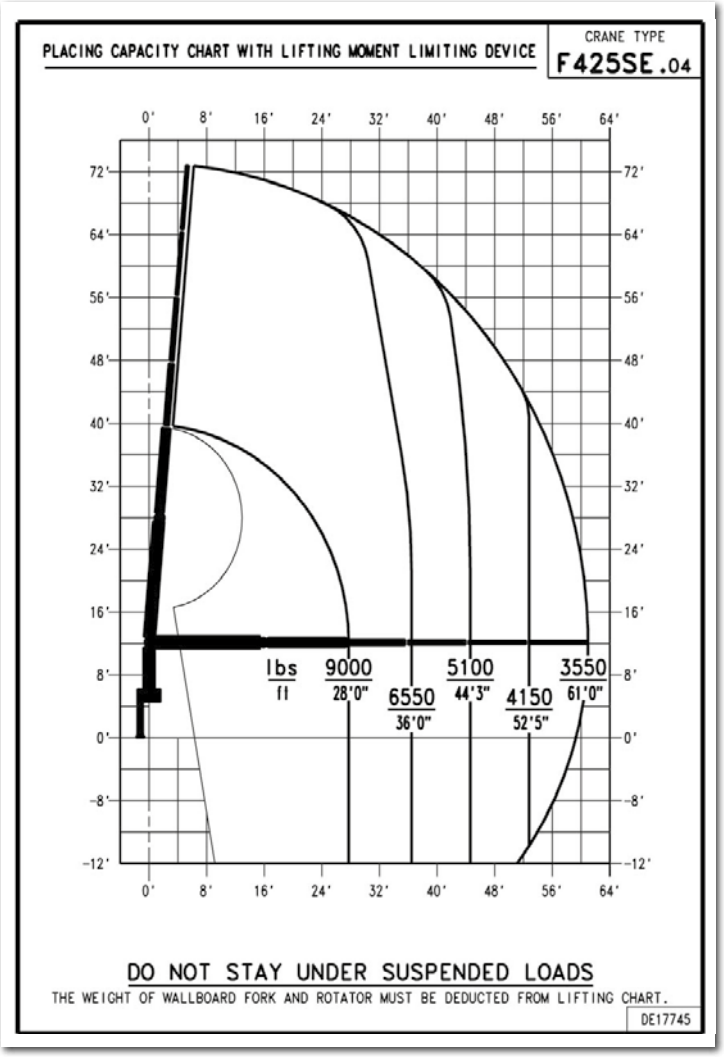

TECHNICAL DATA	F425SE.04
Lifting capacity	252172 lbs.ft
Standard reach	61'0" ft
Hydraulic extension	32'8" ft
Rotation arc	470°
Rotation torque	36878 lbs.ft
Working pressure	5076 psi
Pump capacity	21+21 gal/min
Oil tank capacity	66 gal
Outriggers spread crane	25'7" ft
Supplementary outriggers	7'7''
Max Crane Angle	84°
*Weight	10692 lbs

TRUCK DATA	
SBA WB: 275"-295"	13.5k tag or pusher
SFA WB: 290" – 300"	(depending on state laws)
20k front axle	Full double frame
46k rear tandems	(RBM 3–3.2 million per rail)

Crane belonging to the HC1 HD5 S2 class (if installed on truck) according to EN 12999:2011

*** Ground Control Crane Weight**

technical drawings

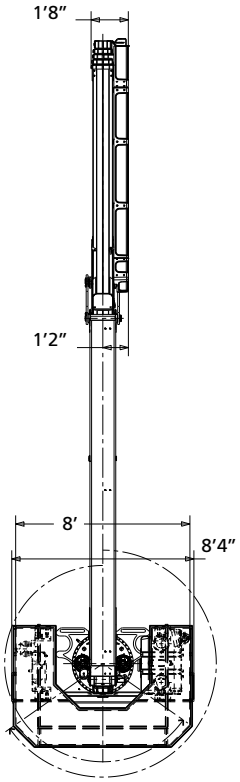

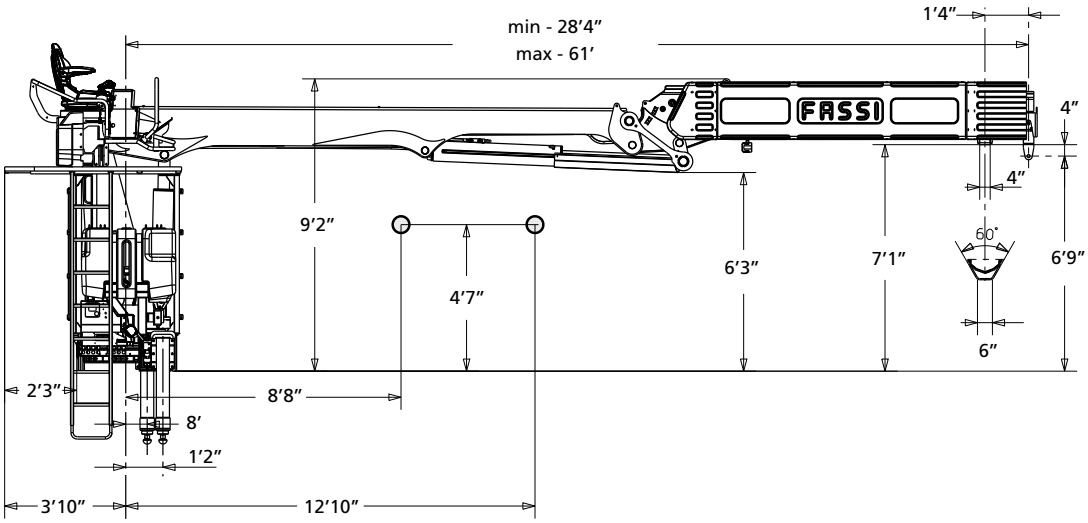

F390SE.22

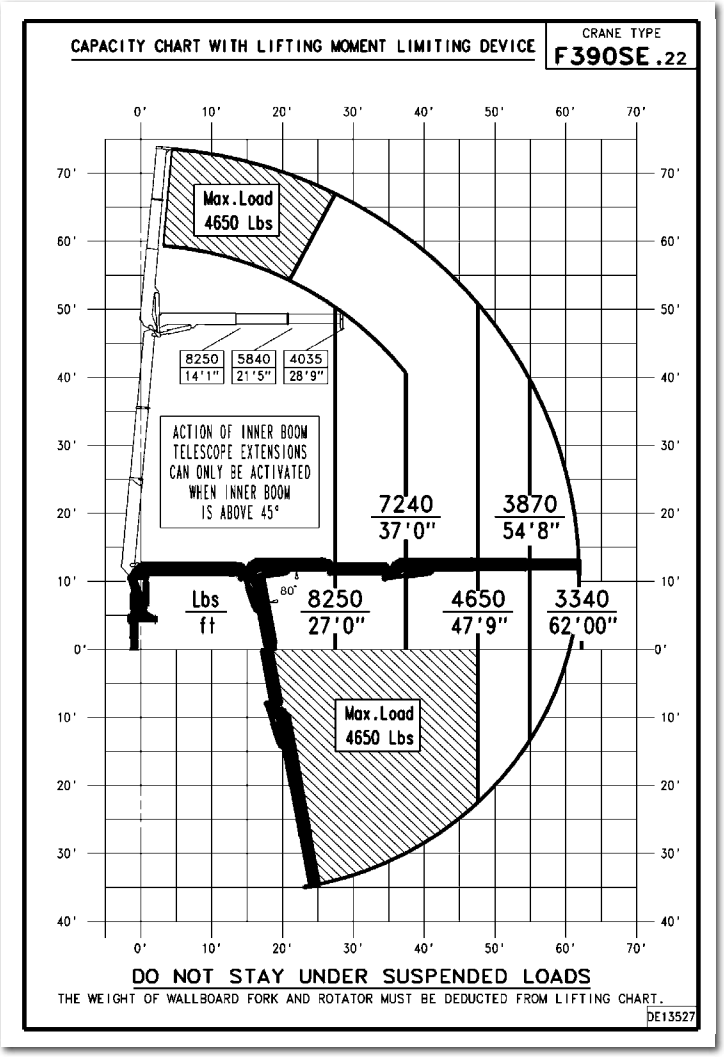

TECHNICAL DATA	F390SE.22
Lifting capacity	267622 lbs.ft
Standard reach	61'10" ft
Hydraulic extension	34'5" ft
Rotation arc	430°
Rotation torque	49112 lbs.ft
Working pressure	4206 psi
Pump capacity	16+16 gal/min
Oil tank capacity	66 gal
Outriggers spread crane	23'6" ft
Supplementary outriggers	16'4"'
Max Crane Angle	80°
*Weight	12566 lbs

TRUCK DATA	
SBA WB: 275"-295"	13.5k tag or pusher
SFA WB: 290" – 300"	(depending on state laws)
20k front axle	Full double frame
46k rear tandems	(RBM 3–3.2 million per rail)

CERTIFIED DYNAMIC PERFORMANCE Dynamic load diagrams calculated, tested and certified to lift the loads at the declared reaches unless indicated

*** Ground Control Crane Weight**

technical drawings

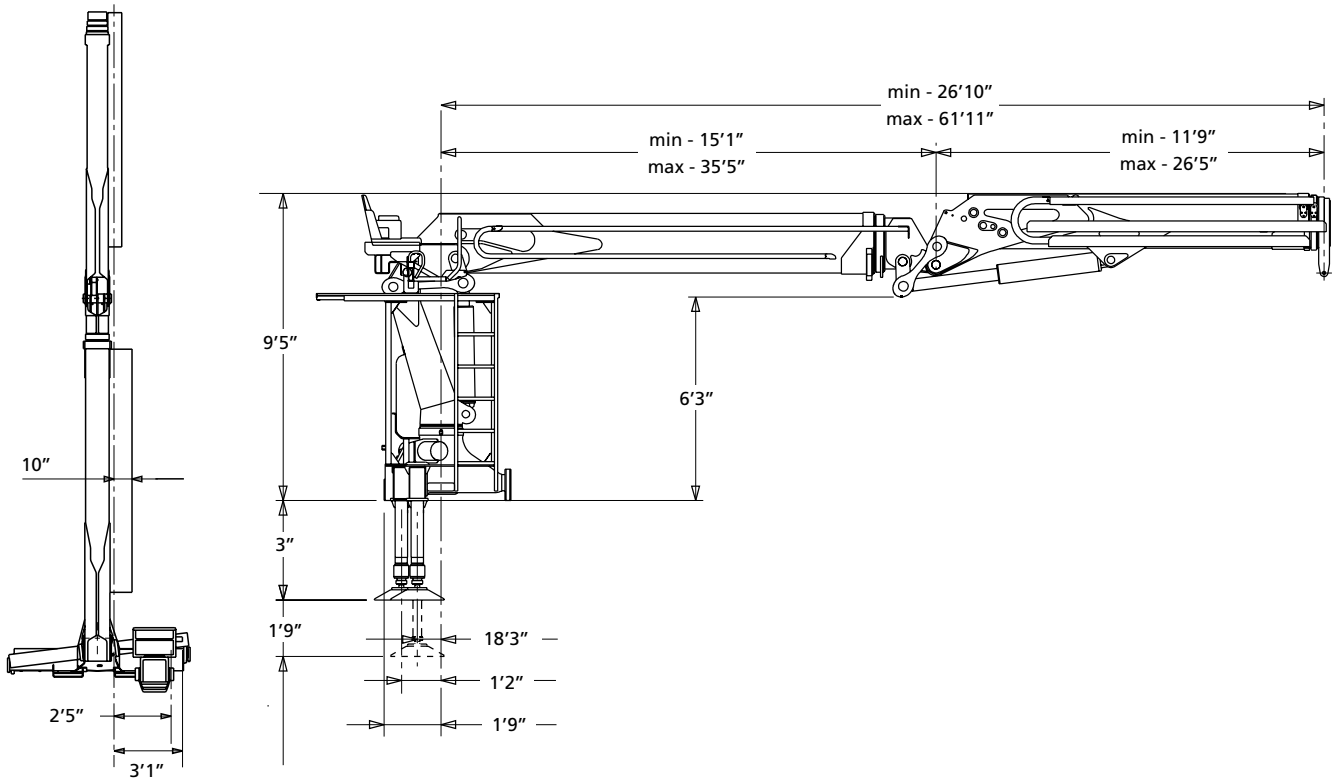

F390SE.24

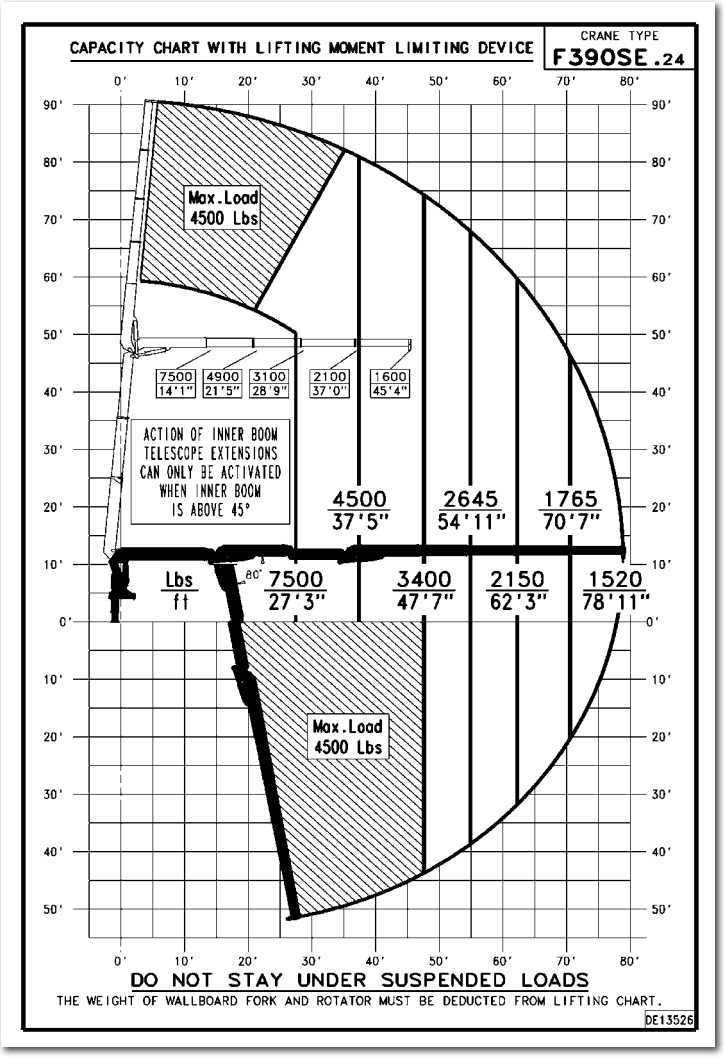

TECHNICAL DATA	F390SE.24
Lifting capacity	202524 lbs.ft
Standard reach	78'10''' ft
Hydraulic extension	51'5''' ft
Rotation arc	430°
Rotation torque	49112 lbs.ft
Working pressure	4206 psi
Pump capacity	16+16 gal/min
Oil tank capacity	66 gal
Outriggers spread crane	23'6'' ft
Supplementary outriggers	16'4'''
Max Crane Angle	80°
*Weight	14835 lbs

TRUCK DATA	
SBA WB: 275"-295"	13.5k tag or pusher
SFA WB: 290" – 300"	(depending on state laws)
20k front axle	Full double frame
46k rear tandems	(RBM 3–3.2 million per rail)

CERTIFIED DYNAMIC PERFORMANCE

Dynamic load diagrams calculated, tested and certified to lift the loads at the declared reaches unless indicated

*** Ground Control Crane Weight**

technical drawings

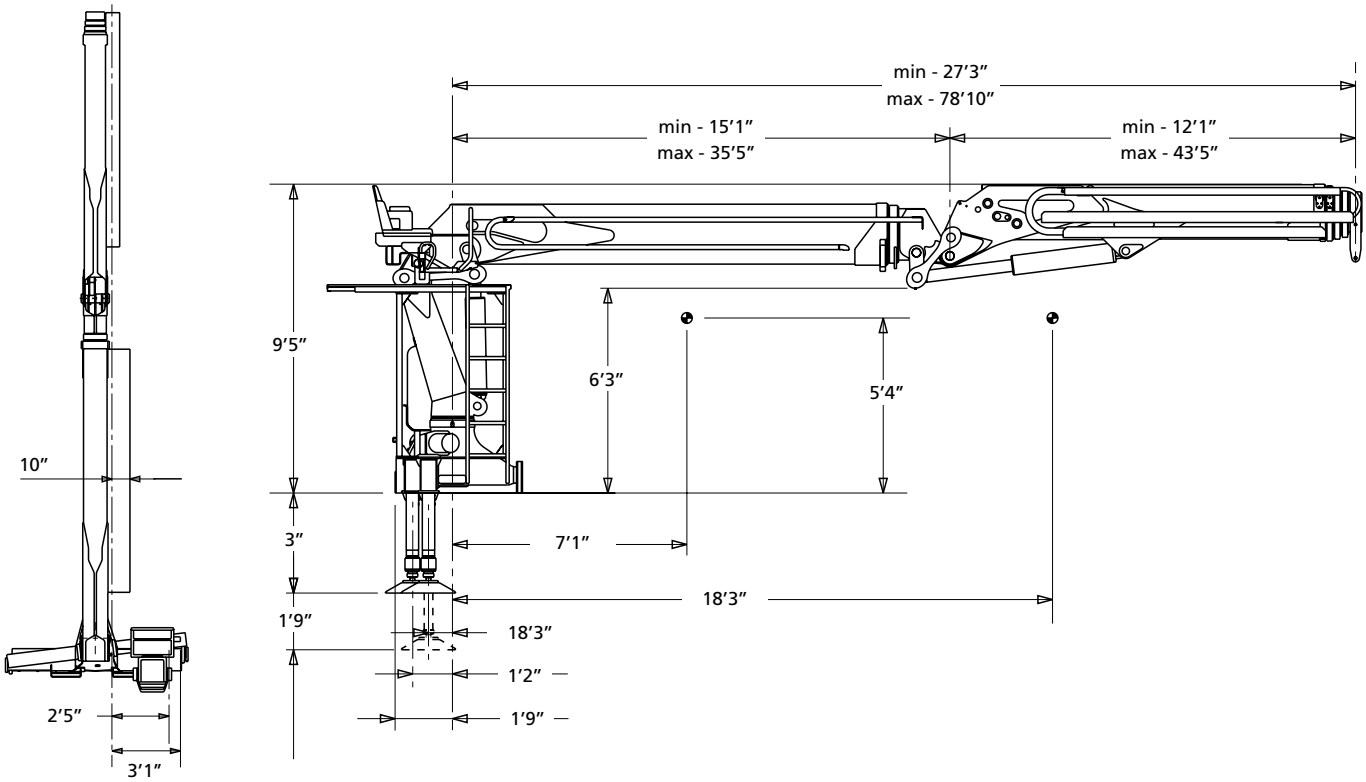

F600SE.44

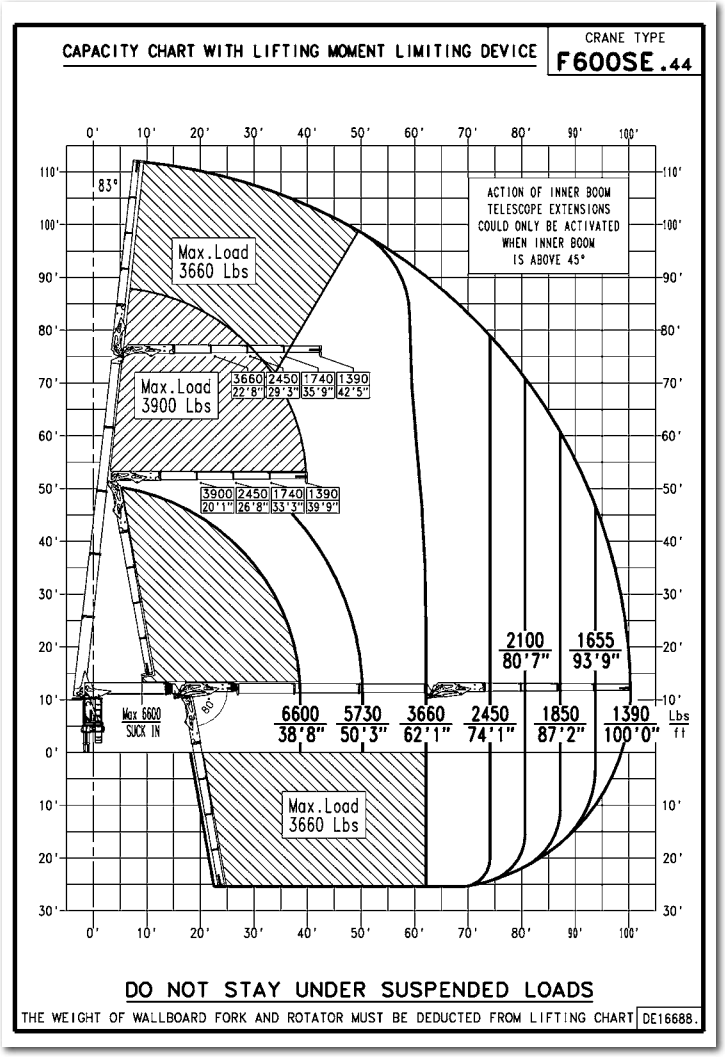

TECHNICAL DATA	F600SE.44
Lifting capacity	289320 lbs.ft
Standard reach	100'0'' ft
Hydraulic extension	73'0'' ft
Rotation arc	360° continuous
Rotation torque	33190 lbs.ft
Working pressure	4930 psi
Pump capacity	26+26 gal/min
Oil tank capacity	66 gal
Outriggers spread crane	26'10'' ft
Supplementary outriggers	22'5"
Max Crane Angle	83°
*Weight	17195 lbs

TRUCK DATA	
SBA WB: 275"-295"	13.5k tag or pusher
SFA WB: 290" – 300"	(depending on state laws)
20k front axle	Full double frame
46k rear tandems	(RBM 3–3.2 million per rail)

Crane belonging to the HC1 HD5 S2 class (if installed on truck) according to EN 12999:2011

*** Ground Control Crane Weight**

technical drawings

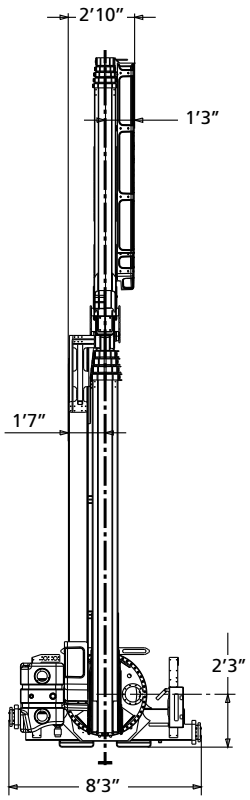

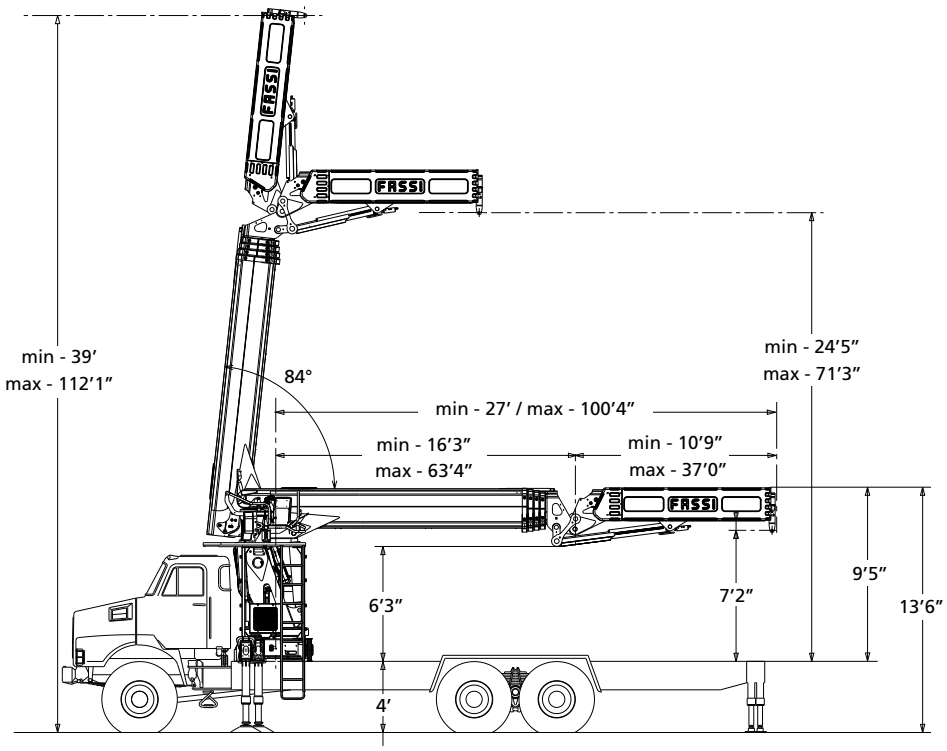

Lifting Tomorrow

FASSI

LEADER IN INNOVATION

Data and descriptions are approximate and not binding

Realized by Fassi Gru S.p.A. @ 2022 - all right reserved - Reproduction in whole or in part of texts and pictures published on this site on magnetic storage media, digital storage media etc. is prohibited

02/2022