OPERATOR'S MANUAL

FW45 Series

Walk Behind Mower

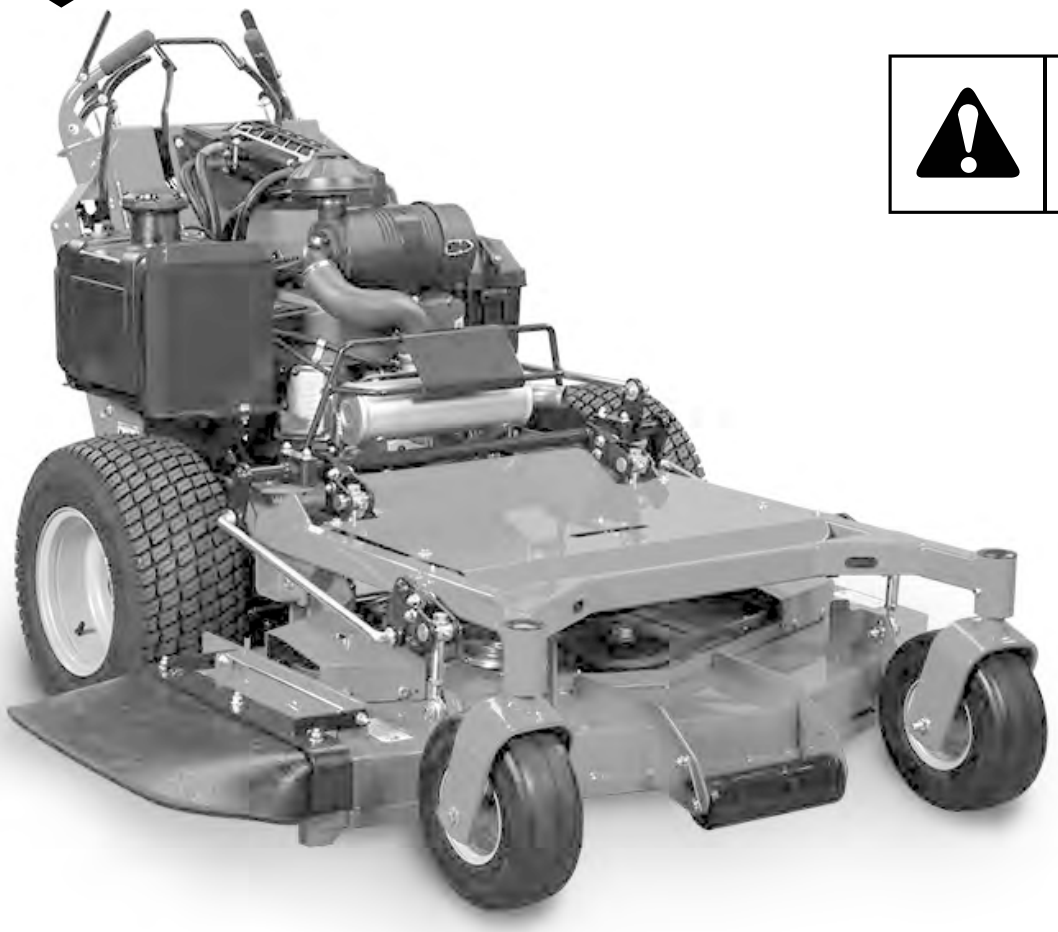

Model	Description	Model	Description
5901882	FW45KAV2152	5901891	FW45KAV2152
5901883	FW45BVE2852	5901892	FW45BVE2852
5901884	FW45CCBVE2852	5901893	FW45CCBVE2852
5901885	FW45BVE2861	5902014	FW45CCKAV2148
5901965	FW45CCKAV2148	5902015	FW45CCKAV2152
5901966	FW45CCKAV2152	5902016	FW45CCKAV2461
5901968	FW45CCKAV2461		
5901969	FW45CCBVE2861		

This manual is available in Spanish. For a copy, contact your Ferris dealer or www.ferrismowers.com.
Este manual está disponible en Español. Para obtener una copia, póngase en contacto con su distribuidor Ferris o www.ferrismowers.com.

© 2024 Briggs & Stratton. All rights reserved.

5108924
Revision G

Table of Contents:

General Information 3
Identifying Your Unit 3
Operator Safety 3
Safety Alert Symbol and Signal Words 3
California Proposition 65 4
Operating Safely 4
Safety Rules and Information 6
Safety Decals and Icons 9
Safety Icons for Optional Sulky Kit Accessory 10
Safety Interlock System 10
Features and Controls 11
Control Functions and Locations 11
Control Locations and Functions - Operator's Position 11
Control Locations and Functions - Left Side of Unit 13
Operation 14
Before First-Time Use 14
Checks Before Starting 14
Starting the Engine - Carbureted Models 15
Starting the Engine - Fuel Injected Models 15
Stopping the Mower 15
Driving the Mower 15
Cutting Height Adjustment 16
Mowing 16
Mowing Recommendations 17
Pushing the Unit by Hand 18
Storage 19
Maintenance Schedule 20
Maintenance Procedures 20
Service and Maintenance Safety 20
Before Maintaining Your Unit 20
Checking Tire Pressures 20
Checking / Adding Fuel 21
Replacing the Fuel Filter 21
Check Engine Oil Level 21
Briggs & Stratton Vanguard Engines with Remote Oil Tank (Select Models) 21
Changing the Engine Oil and Filter (Engines with Remote Oil Tank) 21
Changing the Engine Oil and Filter (Kawasaki Models) 23
Clean the Engine Compartment Area with Pressurized Air and Water 23
Engine Maintenance 23
Containing Spilled Fluids and Proper Disposal of Waste 23
Electronic Fuel Injection (EFI) System - EFI Models 24
Accessing the Engine Compartment 24
Lubrication 24
Lubricating the Front Casters 25
Servicing the Mower Blades 26
Check / Fill Transmission Oil Level 27
Transmission Oil Filter Change 28
Purging the Air from the Hydraulic System 29
Neutral Adjustment & Tracking Adjustment 30
Drive Levers - Control Responsiveness Adjustment 30
Drive Levers - Placement Adjustment 31
Forward Speed Control Lever Operating Force Adjustment 32
Deck Lift Rods 32
Mower Deck Leveling Procedure 32
Mower Deck Drive Belt Replacement 33
Transaxle Drive Belt Replacement 34
Parking Brake Adjustment 35
Cleaning the Battery and Cables 36
Battery Service 36
Troubleshooting 38
Troubleshooting Charts 38
Troubleshooting Common Cutting Problems 39
Specifications 40
Warranty 42
Warranty Statement 42
Evaporative Emissions Warranty 43

Not for Reproduction

General Information

Thank you for purchasing this quality-built Ferris Commercial Walk Behind Mower. We're pleased that you've placed your confidence in the brand Ferris. When operated and maintained according to the manuals, your Ferris product will provide many years of dependable service.

The manuals contain safety information to make you aware of the hazards and risks associated with the unit and how to avoid them. This Commercial Walk Behind Mower was designed to be used as described in this operator's manual and operated by trained professionals for finish cutting of established lawns and is not intended for any other purpose. It is important that you read and understand the instructions thoroughly before attempting to start or operate this equipment. **Save these original instructions for future reference.**

Use only Ferris approved riding accessories. Use of other accessories is not recommended.

The images in this document are representative, and are meant to complement the instructional copy they accompany. Your unit may vary from the images displayed. *LEFT* and *RIGHT* are as seen from the operator's position.

Ferris is a registered trademark of Briggs & Stratton.

Identifying Your Unit

The following products are covered by this manual:

5901882, 5901883, 5901884, 5901885, 5901965, 5901966, 5901968, 5901969, 5901891, 5901892, 5901893, 5902014, 5902015 & 5902016

The product identification tag (A, Figure 1) can be found in the location shown.

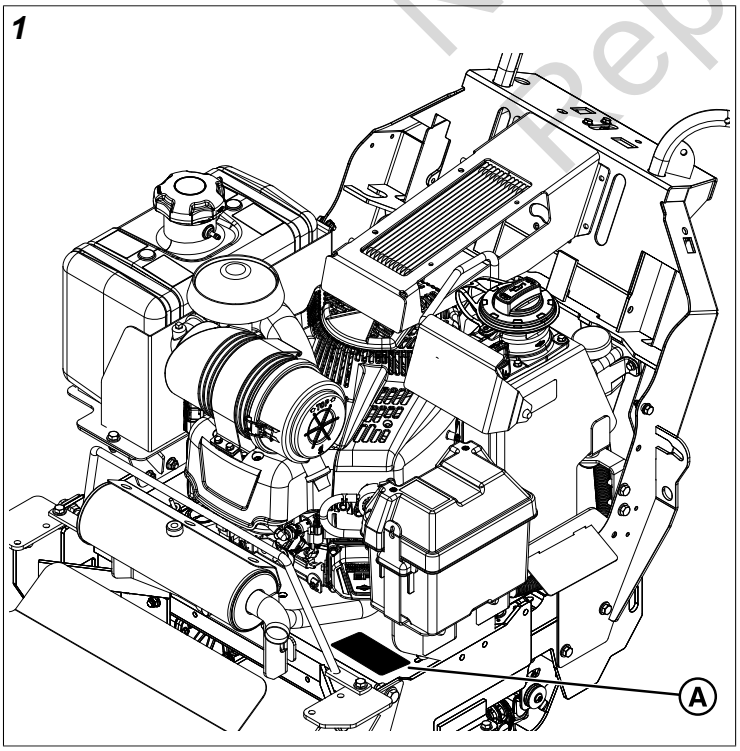

Your unit may feature a serial tag that looks like either one of the following two options:

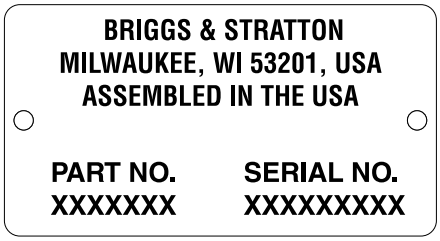

PRODUCT REFERENCE DATA	
Unit Model Number:	
Unit Serial Number:	
Mower Deck Model Number: (if applicable)	
Mower Deck Serial Number: (if applicable)	
Dealer Name:	
Date Purchased:	
ENGINE REFERENCE DATA	
Engine Make:	
Engine Model:	
Engine Type/Spec:	
Engine Code/Serial Number	

When contacting your authorized service dealer for replacement parts, service, or information you MUST have these numbers.

Note: For the location of the engine identification numbers, refer to engine owner's manual.

The Illustrated Parts List for this machine can be downloaded from ferrismowers.com. Please provide model and serial number when ordering replacement parts.

Operator Safety

Safety Alert Symbol and Signal Words

The safety alert symbol ⚠ identifies safety information about hazards that can result in personal injury. A signal word (**DANGER**, **WARNING**, or **CAUTION**) is used with the alert symbol to indicate the likelihood and the potential severity of injury. In addition, a hazard symbol may be used to represent the type of hazard.

Not for Reproduction

DANGER indicates a hazard which, if not avoided, **will** result in death or serious injury.

WARNING indicates a hazard which, if not avoided, **could** result in death or serious injury.

CAUTION indicates a hazard which, if not avoided, **could** result in minor or moderate injury.

NOTICE indicates information considered important but not hazard-related.

California Proposition 65

WARNING

This product can expose you to chemicals including gasoline engine exhaust, which is known to the State of California to cause cancer and carbon monoxide, which is known to the State of California to cause birth defects or other reproductive harm. For more information go to www.P65Warnings.ca.gov.

Operating Safely

Read these safety rules and follow them closely. Failure to obey these rules could result in loss of control of the unit, severe personal injury or death to you, or bystanders, or damage to property or equipment. **This mowing deck is capable of amputating hands and feet and throwing objects.**

The safety alert triangle ( ) in text signifies important cautions or warnings which must be followed.

Operating Safety

Congratulations on purchasing a superior-quality piece of lawn and garden equipment. Our products are designed and manufactured to meet or exceed all industry standards for safety.

Do not operate this machine unless you have been trained. Reading and understanding this operator's manual is a way to train yourself.

Power equipment is only as safe as the operator. If it is misused, or not properly maintained, it can be dangerous!

Remember, you are responsible for your safety and that of those around you.

Use common sense, and think through what you are doing. If you are not sure that the task you are about to perform can be safely done with the equipment you have chosen, ask a professional: contact your local authorized dealer.

Read the Manual

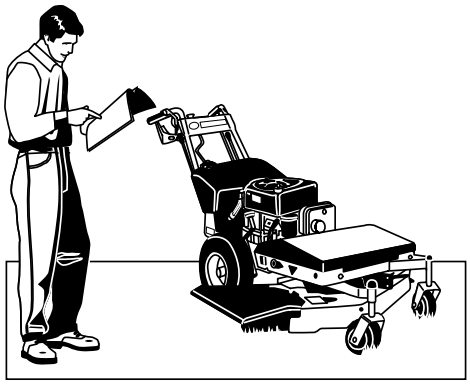

The operator's manual contains important safety information you need to be aware of BEFORE you operate your unit as well as DURING operation.

Safe operating techniques, an explanation of the product's features and controls, and maintenance information is included to help you get the most out of your equipment investment.

Be sure to completely read the Safety Rules and Information found on the following pages. Also completely read the Operation section.

Children

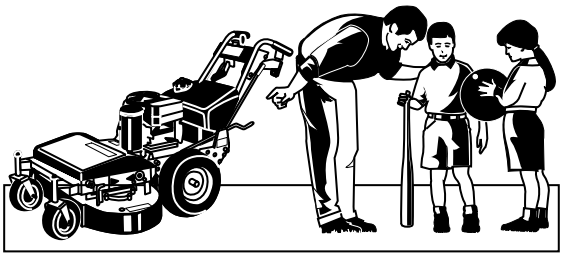

Tragic accidents can occur with children. Do not allow them anywhere near the area of operation. Children are often attracted to the unit and mowing activity. Never assume that children will remain where you last saw them. If there is a risk that children may enter the area where you are mowing, have another responsible adult watch them.

Not for Reproduction

Slope Operation

You could be seriously injured if you use this unit on too steep of a slope. Using the unit on a slope that is too steep where you do not have adequate footing and unit traction (and control) can cause you to lose control and possibly slip and fall or roll the unit over.

Always mow across slopes, not up and down (you could slip and fall.)

Also, note that the surface you are on can greatly impact your ability to safely operate this machine. Wet grass or soft soil can seriously affect your footing and traction of the unit. Do not operate on slopes that are slippery, wet, or have soft soil.

Thrown Objects

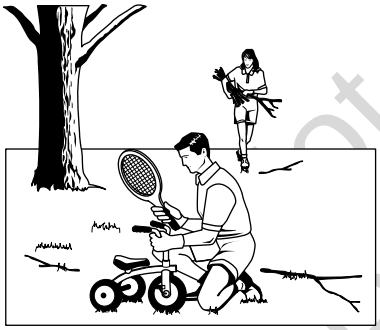

This unit has spinning mower blades. These blades can pick up and throw debris that could seriously injure a bystander. Be sure to clean up the area to be mowed and remove objects that could be thrown by the blade BEFORE you start mowing.

Do not operate this unit without the entire grass catcher or discharge guard (deflector) in place.

Also, do not allow anyone in the area while the unit is running! If someone does enter the area, shut the unit off immediately until they leave.

Moving Parts

This equipment has many moving parts that can injure you or someone else. However, if you stay in the operator zone (area behind the handles and controls), and follow the safety rules in this operator's manual, the unit is safe to operate.

The mower deck has spinning mower blades that can amputate hands and feet. Do not allow anyone near the unit while it is running! Keep safety devices (guards, shields, and switches) in place and working.

To help you, the operator, use this equipment safely, it is equipped with an operator-present safety system. Do NOT attempt to alter or bypass the system. See your dealer immediately if the system does not pass all the safety interlock system tests found in this manual.

Fuel and Maintenance

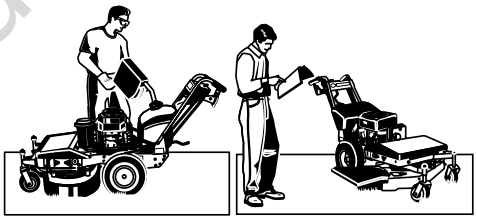

Always disengage all drives, shutoff the engine and remove the key before doing any cleaning, refueling or servicing.

Gasoline and its vapors are extremely flammable. Do not smoke while operating or refueling. Do not add fuel while engine is hot or running. Allow engine to cool for at least 3 minutes prior to adding fuel.

Do not add fuel indoors, in an enclosed trailer, garage or other enclosed area that is not well ventilated. Gasoline spills should be cleaned up promptly and before operation begins.

Gasoline should be stored only in sealed containers approved for fuel.

Proper maintenance is critical to the safety and performance of your unit. Keep the unit free of grass, leaves and excess oil. Be sure to perform the maintenance procedures listed in this manual, especially periodically testing the safety system.

Not for Reproduction

Enclosed Areas

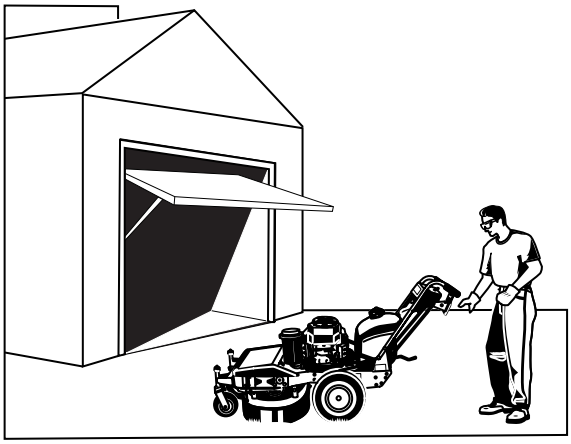

Only operate this unit outdoors and away from unventilated areas such as inside garages or enclosed trailers. The engine emits poisonous carbon monoxide gas and prolonged exposure in an enclosed area can result in serious injury or death.

Safety Rules and Information

Training

- Read, understand, and follow all instructions in the manual and on the unit before starting. If the operator(s) or mechanic(s) can not read English it is the owner's responsibility to explain this material to them.
- Become familiar with the safe operation of the equipment, operator controls, and safety signs.
- All operators and mechanics should be trained. The owner is responsible for training the users.
- Only allow responsible adults, who are familiar with the instructions, to operate the unit.
- Never let children or untrained people operate or service the equipment. Local regulations may restrict the age of the operator.
- The owner/user can prevent and is responsible for accidents or injuries occurring to themselves, other people or property.
- Data indicates that operators, age 60 years and above, are involved in a large percentage of riding mower-related injuries. These operators should evaluate their ability to operate the riding mower safely enough to protect themselves and others from serious injury.

Preparation

- Evaluate the terrain to determine what accessories and attachments are needed to properly and safely perform the job. Use only accessories and attachments approved by the manufacturer.
- Wear appropriate clothing including safety shoes, safety glasses and ear protection. Long hair, loose clothing or jewelry may get tangled in moving parts.
- Inspect the area where the equipment is to be used and remove all objects such as rocks, toys and wire, which can be thrown by the machine.
- Use extra care when handling gasoline and other fuels. They are flammable and vapors are explosive.
- Use only an approved container.
- Never remove fuel cap or add fuel with the engine running. Allow engine to cool before refueling. Do not smoke.
- Never refuel or drain the machine indoors.
- Check that operator's presence controls, safety switches and shields are attached and functioning properly. Do not operate unless they are functioning properly.

Operation

- Never run an engine in an enclosed area.
- Mow only in the daylight or with good artificial light, keeping away from holes and hidden hazards.
- Be sure all drives are in neutral and parking brake is engaged before starting engine. Only start engine from the operator's position.
- Be sure of your footing while using pedestrian controlled equipment, especially when backing up. Walk, don't run. Reduced footing could cause slipping.
- Slow down and use extra care on hillsides. Be sure to travel in the recommended direction on hillsides. Turf conditions can affect the machines stability. Use caution when operating near drop-offs.
- Do not mow in reverse unless absolutely necessary. Always look down and behind before and while traveling in reverse.
- Be aware of the mower discharge direction and do not point it at anyone. Do not operate the mower without either the entire grass catcher or the deflector in place.
- Slow down and use caution when making turns and when changing directions on slopes.
- Never raise deck with the blades running.
- Never leave a running unit unattended. Always disengage the PTO, set the parking brake, stop the engine, and remove keys before dismounting. Keep hands and feet away from the cutting units.
- Turn off the PTO switch to disengage the blades when not mowing.
- Never operate with guards not securely in place. Be sure all interlocks are attached, adjusted properly and functioning properly.
- Never operate with the discharge deflector raised, removed or altered, unless using a grass catcher.
- Do not change the engine governor setting or over-speed the engine.
- Stop on level ground, lower implements, disengage drives, engage parking brake, shut off engine before leaving the operator's position for any reason including emptying the grass catchers or unclogging the chute.
- Stop equipment and inspect blades after striking objects or abnormal vibration occurs. Make necessary repairs before resuming operations.
- Keep hands and feet away from the cutting units.
- Look behind and down before backing up to be sure of a clear path.
- Never carry passengers and keep pets and bystanders away.

Not for Reproduction

- Do not operate the unit while under the influence of alcohol or drugs.
- Slow down and use caution when making turns and crossing roads and sidewalks. Stop blades if not mowing.
- Use care when loading or unloading the machine into a trailer or truck.
- Use care when approaching blind corners, shrubs, trees or other objects that may obscure vision.
- To reduce fire hazard, keep unit free of grass, leaves & excess oil. Do not stop or park over dry leaves, grass or combustible materials.

WARNING

It is a violation of California Public Resource Code, Section 4442, to use or operate the engine on any forest-covered, brush-covered or grass-covered land unless the exhaust system is equipped with a spark arrester, as defined in section 4442, maintained in effective working order. Other states or federal jurisdictions may have similar laws. Contact an Authorized Service Dealer to obtain a spark arrester designed for the exhaust system installed on this engine.

- OSHA regulations may require the use of hearing protection when exposed to sound levels greater than 85 dBA for an 8 hour time period.

CAUTION

This machine produces sound level in excess of 85 dBA at the operator's ear and can cause hearing loss through extended periods of exposure.
Wear hearing protection when operating this machine.

Slope Operation

Slopes are a major factor related to loss-of-control and tip-over accidents, which can result in severe injury or death. All slopes require extra caution. If you cannot back up the slope or if you feel uneasy on it, do not drive on it.

WARNING

Operating on a steep slope can cause sliding and loss of steering, control, and rollover.
Select slow ground speed before driving onto a slope. Use extra caution when operating on slopes with rear mounted grass catchers.

Mow across the face of slopes, not up and down, use caution when changing directions and DO NOT START OR STOP ON A SLOPE.

Do:

- Mow across slopes, not up and down.
- Remove obstacles such as rocks, tree limbs, etc.
- Watch for holes, ruts, or bumps. Uneven terrain could overturn the unit. Tall grass can hide obstacles.
- Use slow speed. Choose a slow speed so that you will not have to stop or change speed while on the slope.
- Use extra care with grass catchers or other attachments. These can change the stability of the unit.
- Keep all movement on the slopes slow and gradual. Do not make sudden changes in speed or direction.
- See your authorized dealer for recommendations of available weights to improve stability.

Do not:

- Avoid starting, stopping, or turning on a slope. If tires lose traction (i.e. machine stops forward motion on a slope), disengage the blade(s) (PTO) and drive slow off the slope.
- Do not turn on slopes unless necessary, and then, turn slowly.
- Do not mow near drop-offs, ditches, or embankments. The operator could lose footing or balance or mower could suddenly turn over if a wheel is over the edge of a cliff or ditch, or if an edge caves in.
- Do not mow on wet grass. Reduced footing or traction could cause sliding.
- Do not mow excessively steep slopes.
- Do not use grass catcher on steep slopes.

Children

Tragic accidents can occur if the operator is not alert to the presence of children. Children are often attracted to the unit and the mowing activity. Never assume that children will remain where you last saw them.

- Keep children out of the mowing area and under the watchful care of another responsible adult.
- Be alert and turn unit off if children enter the area.
- Before and during reverse operation, look behind and down for small children.
- Never allow children to operate the unit.
- Use extra care when approaching blind corners, shrubs, trees, or other objects that may obscure vision.

Emissions

- Engine exhaust from this product contains chemicals known, in certain quantities, to cause cancer, birth defects, or other reproductive harm.
- Look for the relevant Emissions Durability Period and Air Index information on the engine emissions label.

Service and Maintenance

Safe Handling of Gasoline

DANGER

Fire and explosion hazard

To avoid personal injury or property damage, use extreme care in handling gasoline. Gasoline is extremely flammable and the vapors are explosive.

- Extinguish all cigarettes, cigars, pipes, and other sources of ignition.
- Use only approved gasoline containers.

Not for Reproduction

- Never remove the gas cap or add fuel with the engine running. Allow the engine to cool before refueling.
- Never fuel the machine indoors.
- Never store the machine or fuel container where there is an open flame, spark, or pilot light such as near a water heater or other appliance.
- Never fill containers inside a vehicle or on a truck bed with a plastic bed liner. Always place containers on the ground away from your vehicle before filling.
- Remove gas-powered equipment from the truck or trailer and refuel it on the ground. If this is not possible, then refuel such equipment on a trailer with a portable container, rather than from a gasoline dispenser nozzle.
- Keep nozzle in contact with the rim of the fuel tank or container opening at all times until fueling is complete. Do not use a nozzle lock-open device.
- If fuel is spilled on clothing, change clothing immediately.
- Never over-fill the fuel tank. Replace gas cap and tighten securely.
- Use extra care in handling gasoline and other fuels. They are flammable and vapors are explosive.
- If fuel is spilled, do not attempt to start the engine but move the machine away from the area of spillage and avoid creating any source of ignition until fuel vapors have dissipated.
- Replace all fuel tank caps and fuel container caps securely.

Maintenance and Storage

- Always observe safe refueling and fuel handling practices when refueling the unit after transportation or storage.
- Always follow the engine manual instructions for storage preparations before storing the unit for both short and long term periods.
- Always follow the engine manual instructions for proper start-up procedures when returning the unit to service.
- Never store the machine or fuel container inside where there is an open flame, such as in a water heater. Allow unit to cool before storing.
- Shut off fuel while storing or transporting. Do not store fuel near flames or drain indoors.
- Keep all hardware, especially blade attachment bolts, tight and keep all parts in good working condition. Replace all worn or damaged decals.
- Never tamper with safety devices. Check their proper operation regularly.
- Disengage drives, lower implement, set parking brake, stop engine and remove key or disconnect spark plug wire. Wait for all movement to stop before adjusting, cleaning or repairing.
- Clean grass and debris from cutting units, drives, mufflers, and engine to prevent fires. Clean up oil or fuel spillage.
- Let engine cool before storing and do not store near flame.
- Stop and inspect the equipment if you strike an object. Repair, if necessary, before restarting.
- Park machine on level ground. Never allow untrained personnel to service machine.
- Use jack stands to support components when required.
- Carefully release pressure from components with stored energy.
- Disconnect battery or remove spark plug wire before making any repairs. Disconnect the negative terminal first and the positive last. Reconnect positive first and negative last.
- Use care when checking blades. Wrap the blade(s) or wear gloves, and use caution when servicing them. Only replace blades. Never straighten or weld them.
- Keep hands and feet away from moving parts. If possible, do not make adjustments with the engine running.
- Charge batteries in an open well ventilated area, away from spark and flames. Unplug charger before connecting or disconnecting from battery. Wear protective clothes and use insulated tools.
- Grass catcher components are subject to wear, damage, and deterioration, which could expose moving parts or allow objects to be thrown. Frequently check components and replace with manufacturer's recommended parts, when necessary.
- Check brake operation frequently. Adjust and service as required.
- Use only factory authorized replacement parts when making repairs.
- Always comply with factory specifications on all settings and adjustments.
- Only authorized service locations should be utilized for major service and repair requirements.
- Never attempt to make major repairs on this unit unless you have been properly trained. Improper service procedures can result in hazardous operation, equipment damage and voiding of manufacturer's warranty.

WARNING

Units with hydraulic pumps, hoses, or motors: Hydraulic fluid escaping under pressure may have sufficient force to penetrate skin and cause serious injury. If foreign fluid is injected into the skin it must be surgically removed within a few hours by a doctor familiar with this form of injury or gangrene may result. Keep body and hands away from pin holes or nozzles that eject hydraulic fluid under high pressure. Use paper or cardboard, and not hands, to search for leaks. Make sure all hydraulic fluid connections are tight and all hydraulic hoses and lines are in good condition before applying pressure to the system. If leaks occur, have the unit serviced immediately by your authorized dealer.

WARNING

Stored energy device. Improper release of springs can result in serious personal injury. Springs should be removed by an authorized technician.

Not for reproduction

Safety Decals and Icons

Read the safety decals before operating your unit. The cautions and warnings are for your safety. Understand and follow all safety decals to avoid a personal injury or damage to the unit.

WARNING

If any safety decals become worn or damaged and cannot be read, order replacement decals from your local dealer.

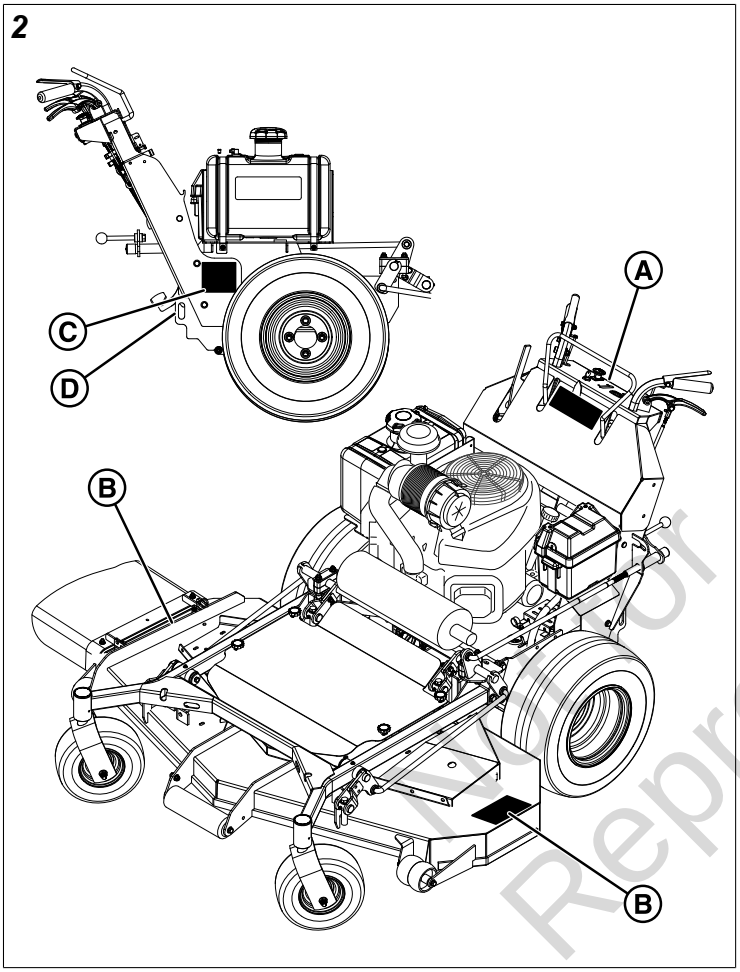

A. **Part Number: 5108832 - Decal, Control Panel**

B. **Part Number: 84007896 - Decal, Danger, Discharge**

C. **Part Number: 5103665 - Decal, Warning, Fire**

D. **Part Number: 5106760 - Decal, Main Safety, Sulky**

5108832 - Decal, Control Panel

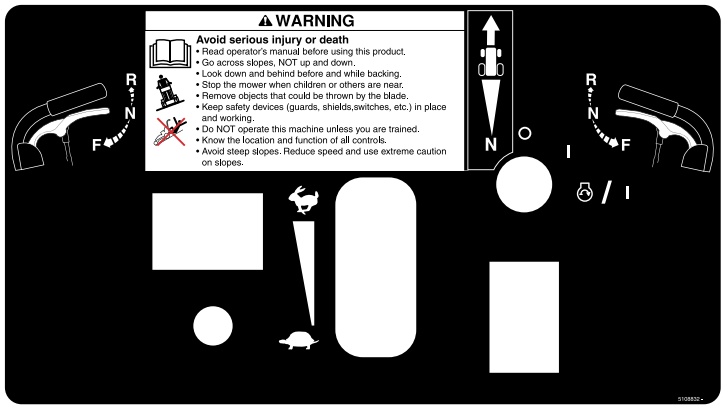

	Safety alert triangle.
WARNING	
	Avoid serious injury or death. • Read operator's manual before using this product. • Go across slopes, not up and down. • Look down and behind before and while backing. • Stop the mower when children or others are near. • Remove objects that could be thrown by the blade. • Keep safety devices (guards, shields, switches, etc.) in place and working. • Do not operate this machine unless you are trained. • Know the location and function of all controls. • Avoid steep slopes. Reduce speed and use extreme caution on slopes.

Decal, Danger, Cut Hand/Foot

Part Number: 84007896

Not for Reproduction

DANGER

Keep hands and feet away from deck.

Do not operate mower unless discharge chute or entire grass catcher is in its proper place.

5103665 - Decal, Warning, Fire

WARNING

Fire Hazard
Gasoline is flammable.
Debris is combustible.

- Allow engine to cool for at least 3 minutes before refueling.
- Keep unit cleaned of debris
- This equipment may create sparks that can start fires around dry vegetation. A spark arrester may be required. Contact local fire agencies for regulations relating to fire prevention requirements.

5103665

	Safety alert triangle.
WARNING	
	Fire hazard. Gasoline is flammable. Debris is combustible. • Allow engine to cool for at least 3 minutes before refueling. • Keep unit cleaned of debris. • This equipment may create sparks that can start fires around dry vegetation. A spark arrester may be required. Contact local fire agencies for regulations relating to fire prevention requirements.

Safety Icons for Optional Sulky Kit Accessory

An optional sulky kit is available as an accessory through your normal parts source.

Use only Ferris approved riding accessories. Use of other accessories is not recommended.

Part Number: 5106760 - Decal, Main Safety, Sulky

DANGER

Loss of Control and Falling Off Sulky Hazard
- Read the Operator's Manual.
- Follow all Safety Rules and Information.
- Always use the appropriate front weight kit when operating on slopes.
- Do NOT operate on slopes over 20 degrees.
- Before operating on steep slopes and/or loading or unloading mower on a trailer, always place sulky in transport position (secured by the chain) and operate as a walk mower.

Crushing Hazard of Sulky - It May Cause Serious Injury
- Do NOT allow sulky to rotate more than 90 degrees while standing on sulky platform.
- Do NOT operate in reverse (back up) while standing on sulky platform, always dismount sulky.

5106760 A

	DANGER
DANGER	
	Crushing hazard of Sulky - It may cause serious injury. • Do not allow sulky to rotate more than 90 degrees while standing on sulky platform. • Do not operate in reverse (back up) while standing on sulky platform, always dismount sulky.
	Loss of Control and Falling Off Sulky Hazard • Read the Operator's Manual. • Follow all Safety Rules and Information. • Always use the appropriate front weight kit when operating on slopes. • Do NOT operate on slopes over 20 degrees. • Before operating on steep slopes and/or loading or unloading mower on a trailer, always place sulky in transport position (secured by the chain) and operate as a walk mower.

Safety Interlock System

This unit is equipped with safety interlock switches. These safety systems are present for your safety, do not attempt to bypass safety switches, and never tamper with safety devices. Check their operation regularly.

Operational SAFETY Checks

Test 1 - Engine should NOT crank if:
- Forward speed control lever is not in the NEUTRAL position.

Test 2 - Engine SHOULD crank if:
- Forward speed control lever is in the NEUTRAL position.

Test 3 - Engine should SHUT OFF if:
- Operator moves the forward speed control lever FORWARD with the parking brake engaged, OR
- Operator releases the operator presence handles while the forward speed control lever is not in the NEUTRAL position.

Test 4 - PTO Switch (blades) should SHUT OFF if:
- If the PTO switch is ON and the operator releases the operator presence handles, OR
- The operator presses the PTO switch down to the OFF position.

Test 5 - PTO Switch (blades) SHOULD turn on if:
- Operator depresses the operator presence handles and the PTO switch is pulled up to the ON position.

Not for Reproduction

Test 6 - Blade Brake Check:

Mower blades and mower drive belt should come to a complete stop within seven (7) seconds after electric PTO switch is turned OFF (or operator releases the operator presence handles). If the mower drive belt does not stop within seven (7) seconds, see your dealer.

Note: Once the engine has been stopped, the forward speed control lever must be returned to the NEUTRAL position, the parking brake should be engaged, the operator presence handles should be depressed and the PTO switch should be in the OFF position in order to start the engine.

WARNING

If the unit does not pass a safety test, do NOT operate it. See your authorized dealer. Under no circumstance should you attempt to defeat the purpose of the safety interlock system.

Features and Controls

Control Functions and Locations

The information below briefly describes the function of individual controls. Starting, stopping, driving, and mowing require the combined use of several controls applied in specific sequences. To learn what combination and sequence of controls to use for various tasks see the *Operation* section.

Control Locations and Functions - Operator's Position

Control Locations: Models with Standard Style Handle Bars

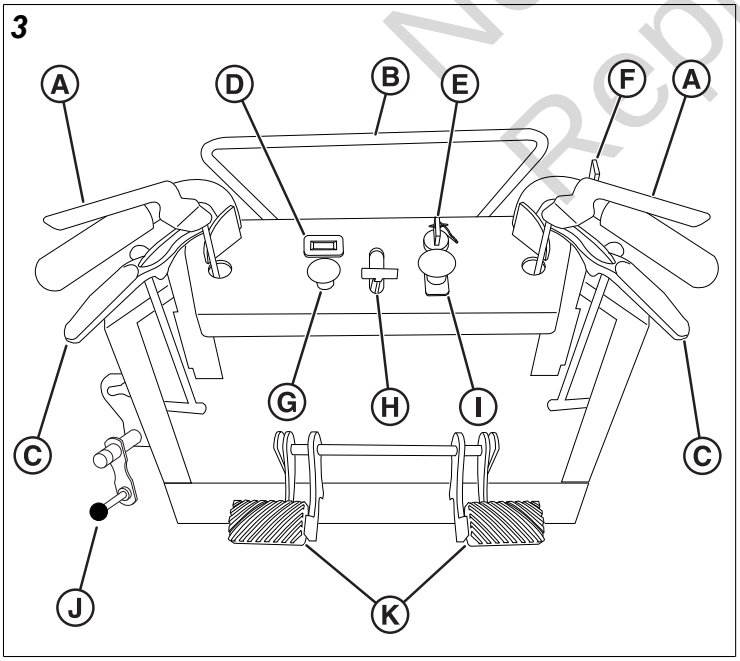

Control Locations: Models with Centralized Controls Style Handle Bars

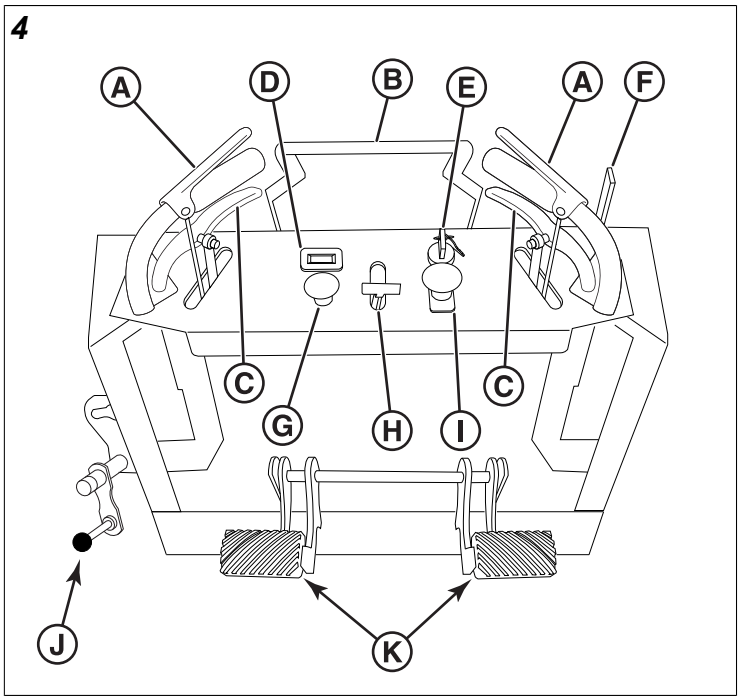

Instrument Control Panel: Models Equipped with Briggs & Stratton EFI Engine

Briggs & Stratton EFI Engines are available on models with either handle bar style.

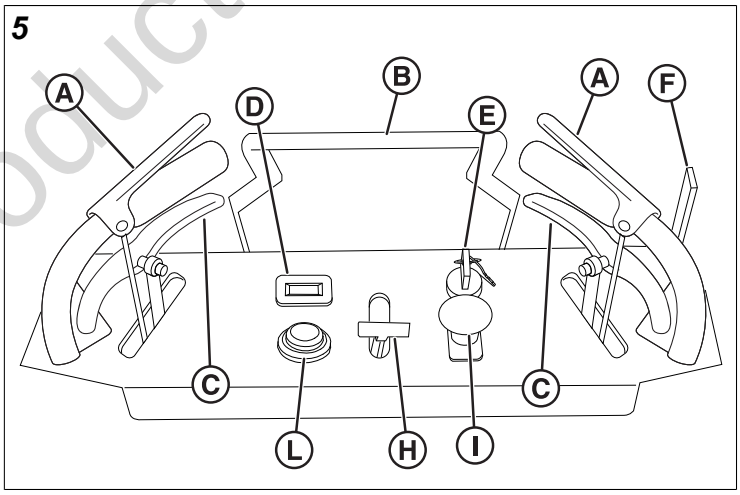

A. **Operator Presence Handles**
B. **Forward Speed Control Lever**
C. **Drive Levers**
D. **Hour Meter**
E. **Ignition Switch**
F. **Parking Brake Lever**
G. **Choke**
H. **Throttle Control**
I. **PTO (Power Take Off) Switch**
J. **Cutting Height Adjustment Handle**
K. **Neutral Return Pedals**
L. **Malfunction Indicator Lamp (M.I.L.)**

Not for Reproduction

Operator Presence Handles: These handles are a major factor in the safety interlock system of the mower. Both handles are tied together so depressing one handle depresses both. The operator must depress the handles in order to activate the PTO (Power Take Off) switch.

If the operator presence handles are released and the forward speed control lever is in the NEUTRAL position and the PTO switch is engaged, the mower blades will stop, but the engine will remain running.

If the operator presence handles are released and the forward speed control lever is NOT in the NEUTRAL position, the engine will stop (with or without the PTO engaged).

Forward Speed Control Lever / Drive Levers: These levers control the ground speed and direction of travel of the mower.

Icon	Control Name
N	Forward Speed Control Lever
Machines with Standard Style Handle Bars:	
	Left Drive Lever
	Right Drive Lever
Machines with Centralized Controls Style Handle Bars:	
	Left Drive Lever
	Right Drive Lever

Icon	Control Position
F	Forward
N	Neutral
R	Reverse

The **forward speed control lever** controls the forward ground speed of both drive wheels. The parking brake must be released before moving the forward speed control lever out of the NEUTRAL position or the engine will stop.

The **left drive lever** controls the steering and reverse ground speed of the left drive wheel. The **right drive lever** controls the steering and reverse ground speed of the right drive wheel. Squeeze both reverse speed control levers evenly to move in reverse.

See the *Driving the Mower* section for proper steering instructions.

Your machine is equipped with one of the different styles of hour meter listed below.

Hour Meter (Displays Numbers Only): The hour meter measures the number of hours that the ignition switch is in the RUN position and the operator presence handles are pressed down. The hour meter has a self contained power source so the total hours are always visible.

Hour Meter (Displays Numbers and Letters): This unit is equipped with a dual function hour meter that records the number of hours that the engine has run while the operator presence handles were pressed down and the number of hours that the PTO switch has been engaged.

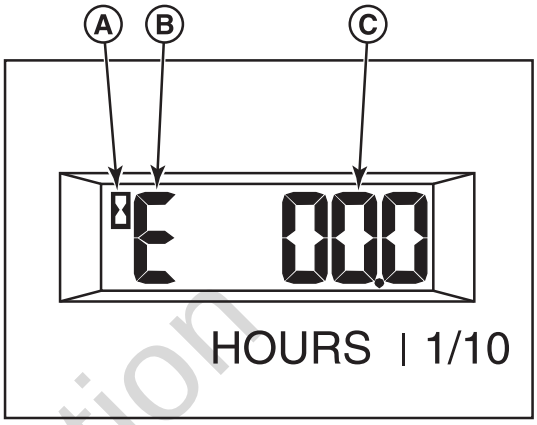

"A" - Hour Glass Icon - The hour glass icon flashes when the hour meter is recording the passage of time.

"B" - Mode Icon - The mode icon will display an "E" when displaying engine hours, and a "P" when displaying PTO hours.

"C" - Time Display - This is the number of hours that are recorded.

The default display of the hour meter is engine hours. The mode icon will display a "E" and the hour glass icon will not flash.

To begin recording engine hours, start the unit's engine and press down the operator presence handles. The hour glass icon will flash.

To begin recording PTO hours, pull the PTO switch up to engage the PTO clutch. The unit's engine must be running and the operator presence handles must be pressed down. The mode icon will display a "P" and the hour glass icon will flash.

While recording PTO hours, the hour meter also records engine hours; however, the hour meter only displays PTO hours when recording PTO hours.

To stop recording PTO hours, push the PTO switch down to disengage the PTO clutch.

To stop recording engine hours, release the operator presence handles.

Not for Reproduction

The hour meter has a self contained power source so that the recorded hours are always visible even when the engine is OFF.

Ignition Switch: The ignition switch starts and stops the engine, it has three positions:

	OFF: Stops the engine and shuts off the electrical system.
	RUN: Allows the engine to run and powers the electrical system.
	START: Cranks the engine for starting.

Note: Never leave the ignition switch in the RUN position with the engine stopped—this drains the battery.

Parking Brake: Pull the parking brake lever rearward and up to engage the parking brake. Move the lever fully forward and down to disengage the parking brake.

Note: To start the unit the parking brake must be engaged.

Engaging the parking brake locks the ground speed control levers in the NEUTRAL position. The parking brake must be disengaged before moving the ground speed control levers out of the NEUTRAL position.

DISENGAGE: Releases the parking brake.	**ENGAGE:** Locks the parking brake.

Choke: Close the choke for cold starting. Open the choke once the engine starts. A warm engine may not require choking. Pull the knob UP to close the choke. Push the knob DOWN to open the choke.

Throttle Control: The throttle controls engine speed. Move the throttle forward to increase engine speed and back to decrease engine speed. Always operate at FULL throttle when mowing.

Fast throttle speed.	Slow throttle speed.

PTO (Power Take Off) Switch: The PTO switch engages and disengages the mower blades. Pull UP on the switch to engage, and push DOWN to disengage.

Neutral Return Pedals:

Icon	Control Name
	Neutral Return Pedals

The neutral return pedals provide a hands-free return to neutral. The pedals are used in conjunction with the drive levers to properly stop the machine. The two pedals are connected together so depressing one depresses both.

The operator must fully depress the neutral pedal downwards to return the mower to neutral. The mower must be in the neutral position to start the engine.

See the *Stopping the Mower* section for operating instructions of the neutral return pedals.

Malfunction Indicator Lamp (M.I.L.): The malfunction indicator lamp detects problems with the engine. If the malfunction indicator lamp begins to flash while you are operating the unit, see the engine operator's manual.

Control Locations and Functions - Left Side of Unit

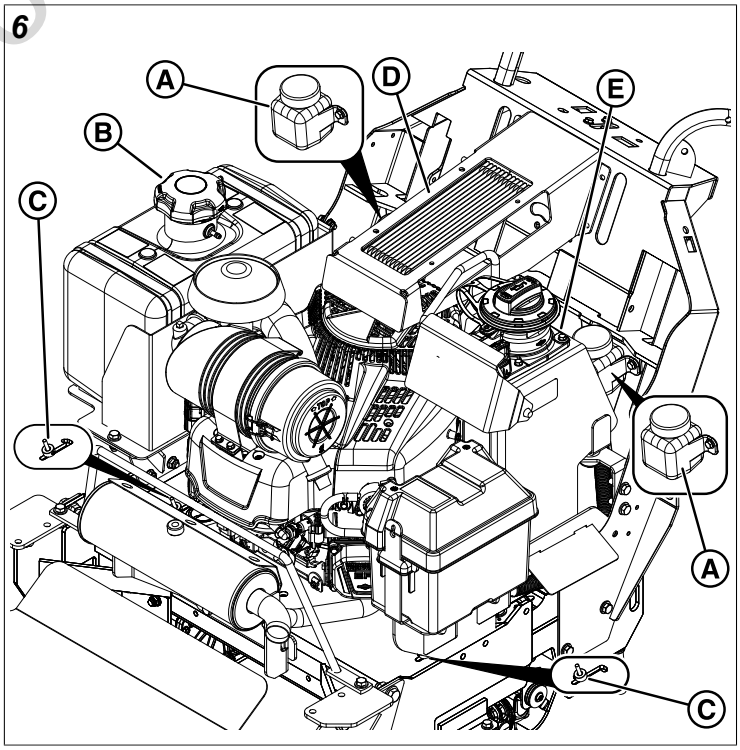

A. **Transmission Oil Fill**

B. **Fuel Tank Cap**

Not for Reproduction

C. **Transmission Release Levers**

D. **Oil Coolers**

E. **Engine Oil Tank (Oil Guard Models Only)**

Fuel Tank Cap: To remove the cap, turn **counter-clockwise**.

Transmission Release Levers:

Icon	Control Name
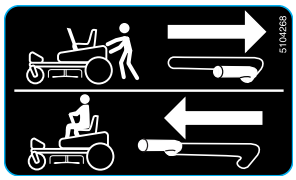	Transmission Release Levers

This unit is equipped with two transmission release levers. The transmission release levers deactivate the transaxle so that the unit can be pushed by hand. Both transmission release levers must be in the same position whether you are driving the unit or pushing it by hand. See *Pushing the Unit by Hand* for operational information.

Cutting Height Adjustment Handle:

Icon	Control Name
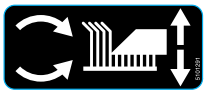	Cutting Height Adjustment Handle

The cutting height adjustment handle controls the mower deck cutting height. To raise the mower deck cutting height: crank the cutting height adjustment handle **clockwise**. To lower the mower deck cutting height crank: the cutting height adjustment handle **counter-clockwise**.

Operation

Before First-Time Use

- Be sure to read all information in the Safety and Operation sections before attempting to operate this unit.
- Become familiar with all of the controls and how to stop the unit.
- Operate in an open area without engaging the PTO to become accustomed to the unit.

WARNING

Read the operator's manual before attempting to operate the machine.

If you do not understand how a specific control functions, or have not yet thoroughly read the Features and Controls section, do so now.

Do not attempt to operate the mower without first becoming familiar with the location and function of all controls.

WARNING

- Before leaving the operator's position for any reason, engage the parking brake, disengage the PTO, stop the engine and remove the key.
- To reduce fire hazard, keep the engine and mower free of grass, leaves and excess grease. Do NOT stop or park unit over dry leaves, grass or combustible materials.
- Gasoline is highly flammable and must be handled with care. Never fill the tank when the engine is still hot from recent operation. Do NOT allow open flame, smoking or matches in the area. Avoid over-filling and wipe up any spills.

Checks Before Starting

1. Check that the crankcase is filled to the full mark on the dipstick. See engine operator's manual for engine oil dipstick location, oil fill instructions, and oil recommendations.
2. Make sure all nuts, bolts, screws, and pins are in place and tight.
3. Fill the fuel tank (A, Figure 7) with fresh fuel. Refer to engine manual for fuel recommendations.

7

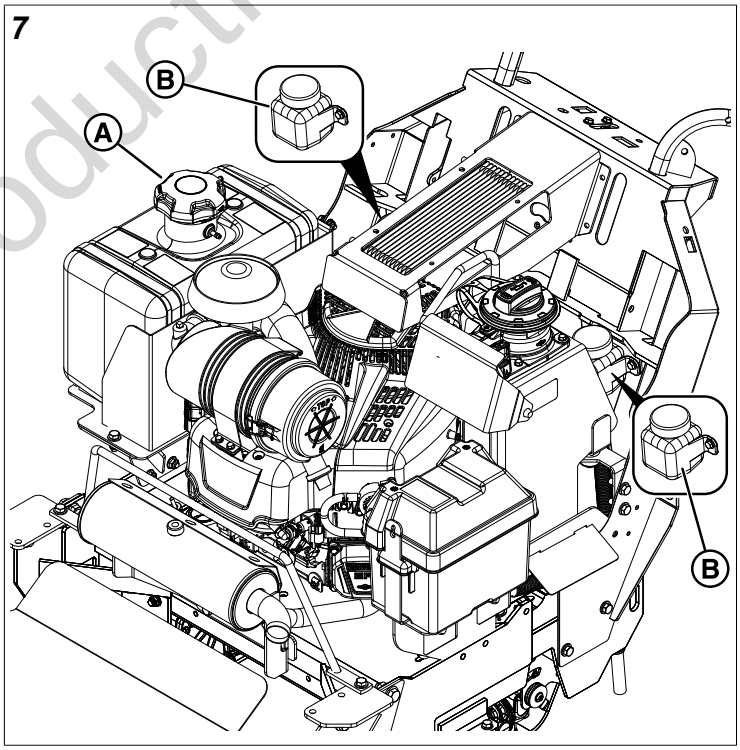

4. Check the hydraulic oil tanks (B) and make sure that the oil level is up to the FULL COLD mark.

Not for Reproduction

Starting the Engine - Carbureted Models

WARNING

If you do not understand how a specific control functions, or have not yet thoroughly read the *Features & Controls* section, do so now.

Do NOT attempt to operate the unit without first becoming familiar with the location and function of ALL controls.

1. Engage the parking brake and make sure the PTO switch is disengaged and the forward speed control lever is in the NEUTRAL position.
2. Set the engine throttle control to FULL throttle position. Then fully close the choke by pulling the knob OUT fully. ***NOTE: A warm engine may not require choking.***
3. Insert the key into the ignition switch and turn it to the START position.
4. After the engine starts, gradually open the choke (push knob down fully). Reduce to half throttle speed and allow to warm up. Warm up the engine by running it for at least a minute before engaging the PTO switch or driving the mower.
5. After warming the engine, ALWAYS operate the unit at FULL THROTTLE when mowing.

In the event of an emergency the engine can be stopped by simply turning the ignition switch to STOP. Use this method only in emergency situations. For normal engine shut down follow the procedure given in STOPPING THE MOWER

Starting the Engine - Fuel Injected Models

WARNING

If you do not understand how a specific control functions, or have not yet thoroughly read the *Features & Controls* section, do so now.

Do NOT attempt to operate the unit without first becoming familiar with the location and function of ALL controls.

Note: To prime a dry fuel system, turn the key switch to ON position for one minute. Allow fuel pump to cycle and prime system. Turn the key switch to OFF.

1. Engage the parking brake and make sure the PTO switch is disengaged and the forward speed control lever is in the NEUTRAL position.
2. Position the engine throttle control midway between the SLOW and FAST positions.
3. Insert the key into the ignition switch and turn it to the START position. Release switch as soon as engine starts. If starter does not turn engine over, shut off key switch immediately, and consult engine operator's manual. *Warm up the engine by running it for at least a minute before engaging the PTO switch or driving the mower.*
4. After warming the engine, ALWAYS operate the unit at FULL THROTTLE when mowing.

In the event of an emergency the engine can be stopped by simply turning the ignition switch to STOP. Use this method only in emergency situations. For normal engine shut down follow the procedure given in STOPPING THE MOWER

Stopping the Mower

1. Gently squeeze both drive levers (A, Figure 8) evenly to stop the unit.

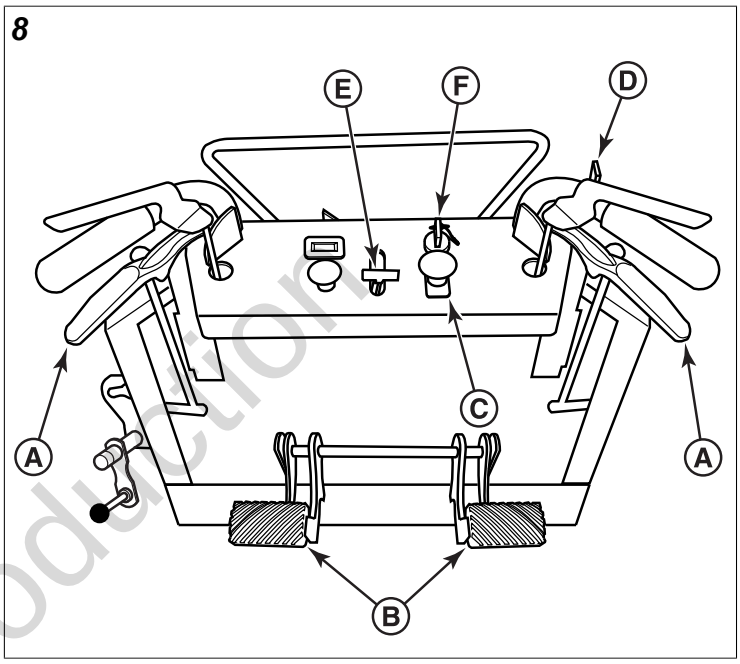

2. Once the unit is stopped, firmly depress the neutral return pedal (B) to place the transmission in neutral.
3. Disengage the PTO by pushing down on the PTO switch (C).
4. Engage the parking brake by pulling the parking brake lever (D) fully up and rearward towards the handle bars.
5. Move the throttle control (E) to mid-throttle position and turn the ignition key (F) to OFF. Remove the key.

Driving the Mower

Before attempting to drive the mower make sure you have read the *Features and Controls* section and understand the location and function of the controls.

The hydrostatic transmission has an infinite number of speeds between full speed forward and reverse, with the faster speeds being achieved by moving the forward speed control lever and drive levers farthest in their directions of travel.

For normal use, the throttle should be kept fully open and the ground speed of the machine determined by the forward speed control lever. When transporting the machine or when loading or unloading from a truck or trailer, partial throttle

Not For Reproduction

should be used to slow the reaction time of the controls and reduce noise.

Practice maneuvering the machine at a slow engine speed on level ground with the PTO switch in the “OFF” position until you are familiar with the controls.

To Move Forward and Set Forward Speed

1. Disengage the parking brake.
2. Gently move the forward speed control lever (A, Figure 9, inset 1) forward until desired speed is achieved.

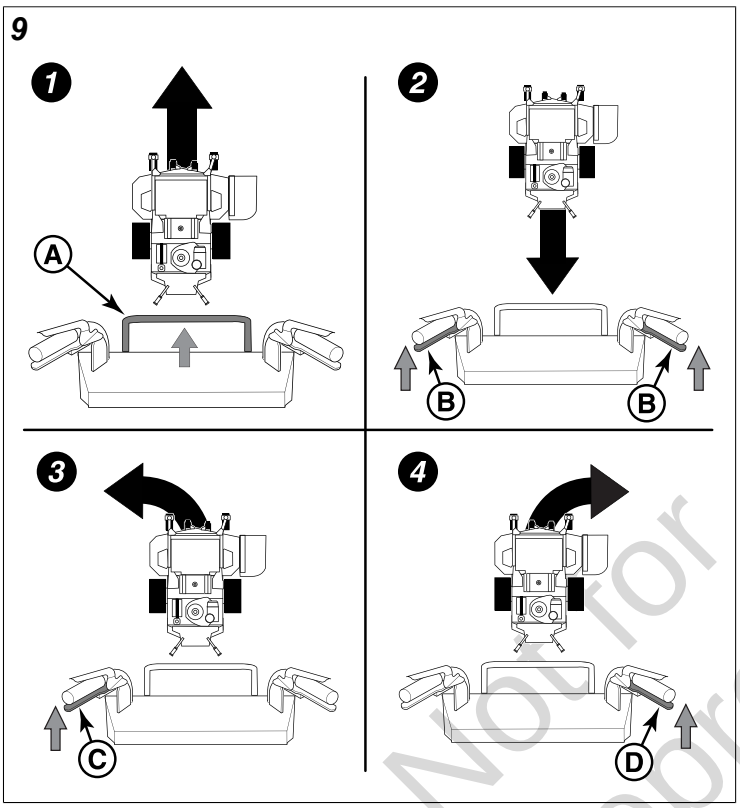

To Move Backward

1. Disengage the parking brake.
2. Gently squeeze both drive levers (B, inset 2) evenly, until desired speed is achieved.

To Slow or Stop Machine

1. Gently squeeze both drive levers evenly to slow the machine.
2. Continuing to squeeze the drive levers will stop the machine.
3. Once the machine is stopped, firmly depress the neutral return pedal to place the transmissions in neutral.
4. Engage the parking brake.

NOTE: Continuing to squeeze the drive levers after the machine is stopped, will cause the machine to move in reverse.

Turning the Machine

Note: Always reduce speed in a turn.

Turning Left:

Gently squeeze the left drive lever (C, inset 3). A sharp or gentle turn is determined by the amount of force applied to the drive lever.

Turning Right:

Gently squeeze the right drive lever (D, inset 4). A sharp or gentle turn is determined by the amount of force applied to the drive lever.

Cutting Height Adjustment

The cutting height indicator (A, Figure 10) will help you identify the cutting height.

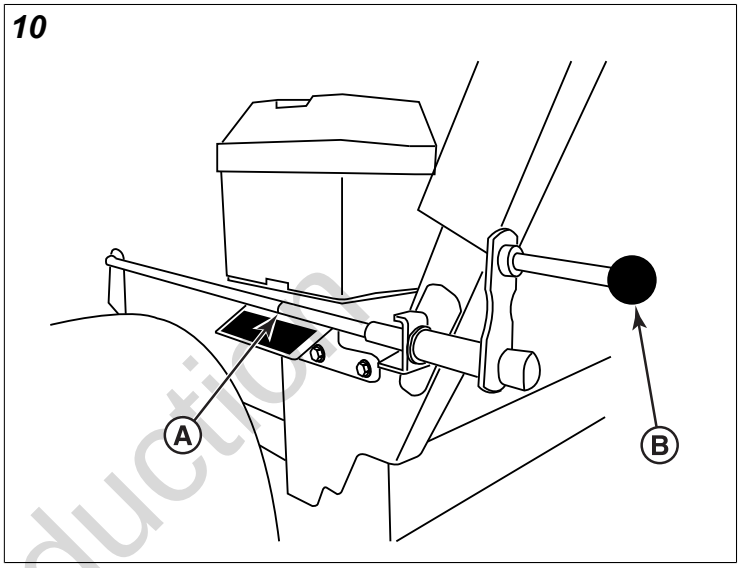

To raise the mower deck:

Turn the cutting height adjustment handle (B) **clockwise**.

To lower the mower deck:

Turn the cutting height adjustment handle **counter-clockwise**.

Mowing

Before mowing, set the cutting height as described in *Cutting Height Adjustment*.

1. Engage the parking brake. Make sure that the PTO switch is disengaged and the forward speed control lever is in the neutral position.
2. Start the engine (see *Starting the Engine*).
3. Set the throttle to the ½ throttle position.

Note: It is best practice to engage the PTO with the throttle set at the minimum throttle position necessary to engage the deck drive system without stalling the engine.

4. Engage the PTO by pulling up the PTO switch.
5. Move the throttle to the "FAST" position and begin mowing.
6. Release the parking brake and begin mowing.
7. When finished, reduce throttle speed so that the engine idles and push the PTO switch down to shut off the PTO.

Not for Reproduction

8. Stop the engine. See *Stopping the Mower*.

Mowing Recommendations

Several factors can affect how well your unit cuts grass, Following proper mowing recommendations can improve the performance and life of your unit.

Height of Grass

Often cutting height is a matter of personal preference. Typically, you should mow the grass when it is between three and five inches high. The proper cutting height range for a specific lawn will depend upon several factors, including the type of grass, the amount of rainfall, the prevailing temperature, and the lawn's overall condition.

Cutting the grass too short causes weak, thin grass plants, which are easily damaged by dry periods and pests. Cutting too short is often more damaging than allowing the grass to be slightly higher.

Letting grass grow a bit longer—especially when it is hot and dry—reduces heat build-up, preserves needed moisture and protects the grass from heat damage and other problems. However, allowing grass to grow too high can cause thin turf and additional problems.

Cutting off too much at one time shocks the plant's growth system and weakens the grass plants. **A good rule of thumb is the 1/3 rule: to cut no more than one third of the grass height, and never more than 1 inch at a time.**

11

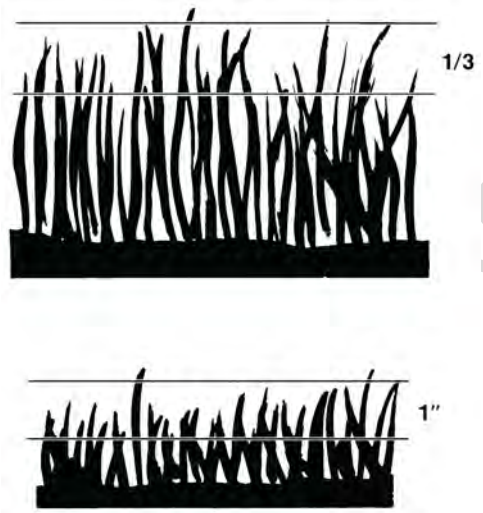

The amount of grass you are able to cut in one pass is also effected by the type of mowing system you are using (for example, broadcasting with side discharge decks can process a much larger volume of grass than mulching does).

Tall grass requires incremental cutting. For extremely tall grass, set the cutting height at maximum for the first pass (A, Figure 12), and then reset it to the desired height and mow a second (B) or third time.

Don't cover the grass surface with a heavy layer of clippings. Consider using a grass collection system and starting a compost pile.

12

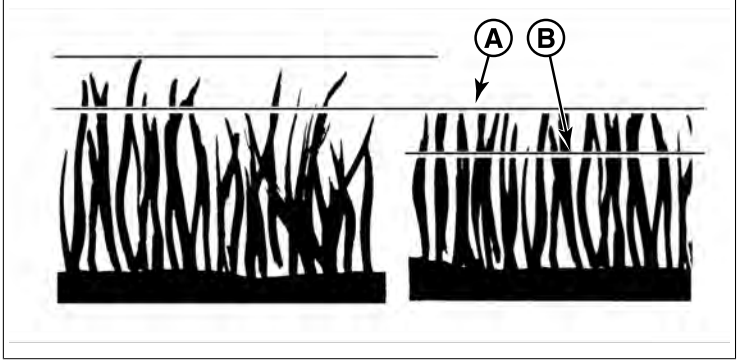

When and How Often to Mow

The time of day and condition of the grass greatly affect the results you'll get when mowing. For the best results, follow these guidelines:

- Mow when the grass is between three and five inches high.
- Mow with sharp blades. Short clippings of grass one inch or shorter decompose more quickly than longer blades. Sharp mower blades cut grass cleanly and efficiently, preventing frayed edges which harm the grass.
- Mow at time of day when the grass is cool and dry. Late afternoon or early evening often provide these ideal mowing conditions.
- Avoid mowing after rain or even heavy dew, and never mulch when the grass is wet (moist grass does not mulch well, and clumps beneath the mower deck).

Mowing Patterns

Always start mowing on a smooth, level area.

The size and type of area to be mowed will determine the best mowing pattern to use. Obstructions such as trees, fences and buildings, and conditions such as slopes and grades must also be considered.

- Cut long straight strips overlapping slightly.
- Where possible, change patterns occasionally to eliminate matting, graining or a corrugated appearance.
- For a truly professional cut, mow across the lawn in one direction, then re-cut the lawn by mowing perpendicular to the previous cut.

Note: Always operate the engine at FULL THROTTLE when mowing.

If you hear the engine slowing down, you are mowing too fast—using a slower ground speed will improve the cutting efficiency of the blades and prevents many common cutting problems. Use an appropriate ground speed for the thickness and height of the grass you are cutting (3rd gear or slower for manual gear models). If you hear the engine slowing down you are mowing too fast, use a slower ground speed.

for reproduction

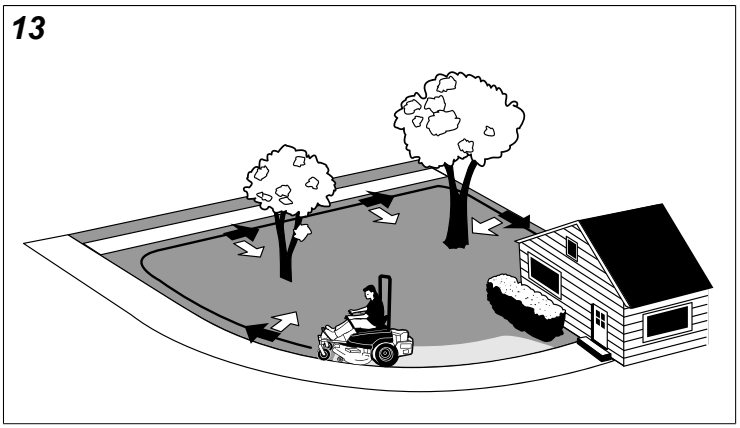

Where possible, make one or two passes around the outside of the area discharging the grass INTO the lawn to keep the cut grass off fences and walks.

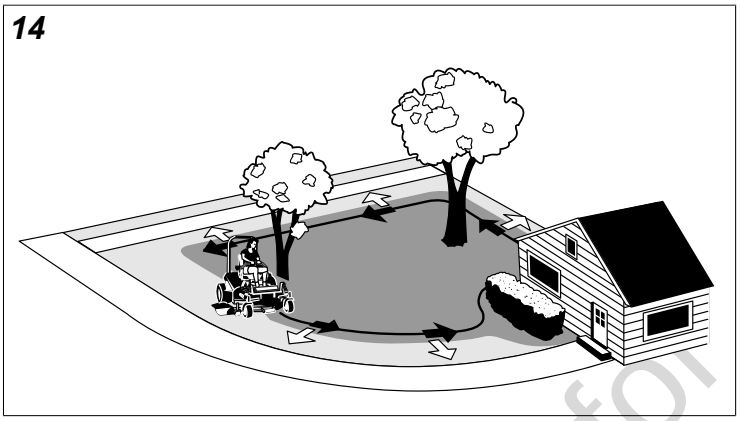

The remainder of the mowing should be done in the opposite direction so that the clippings are dispersed OUT onto the area of lawn previously cut.

Mowing Methods

Broadcast Mowing

Broadcasting, or side-discharging, disperses fine clippings evenly over the entire lawn. Many golf courses use this method. Your mower has a deep dish deck to allow freer circulation of clippings so they are broadcast evenly over the lawn.

Engine Speed & Ground Speed for Broadcasting:

Always operate the engine at full throttle when mowing. If you hear the engine slowing down, you are mowing too fast—using a slower ground speed will improve the cutting efficiency of the blades and prevents many common cutting problems.

ALWAYS use an appropriate ground speed for the thickness and height of the grass you are cutting (3rd gear or slower for manual gear models). If you hear the engine slowing down you are mowing too fast, use a slower ground speed.

How Much Grass to Cut Off When Broadcasting:

Mow when the grass is 3-5 inches long. Do not cut the grass shorter than 2 to 2-1/2 inches. Do not cut off more than 1 inch of grass in a single pass.

Mulching

Mulching consists of a mower deck which cuts and re-cuts clippings into tiny particles and which then blows them down INTO the lawn. These tiny particles decompose rapidly into by-products your lawn can use. UNDER PROPER CONDITIONS, your mulching mower will virtually eliminate noticeable clippings on the lawn surface.

Note: When mulching under heavy cutting conditions, a rumbling sound may be present and is normal.

Mulching Requires EXCELLENT Mowing Conditions:

Mulching mowers cannot function properly if the grass is wet, or if the grass is simply too high to cut. Even more than normal mowing, mulching requires that the grass be dry and the appropriate amount is cut.

Do not use the mower as a mulching mower during the first two or three mowings in the spring. The long grass blades, quick growth, and often wetter conditions are more suitable for broadcasting (side-discharging) or grass bagging operation.

Engine Speed & Ground Speed for Mulching:

Use full engine throttle matched with a slow ground speed so that clippings will be finely cut. Ground speed while mulching should be HALF of the speed that would be used when broadcasting (side discharging) under similar conditions. Since mulching requires more horsepower than broadcasting, using a slower ground speed is vitally important for proper mulching operation.

How Much Grass to Mulch:

The best mulching action typically results from cutting only the top 1/2 inch to 3/4 inch of grass blade. This provides short clippings which decompose properly (much more quickly than longer clippings). The ideal cutting height will vary with climate, time of year, and quality of your lawn. We recommend that you experiment with both the cutting height and ground speed until you achieve the best cut. Start with a high cutting height and using progressively lower settings until you find a cutting height that is matched to your mowing conditions and preferences.

Pushing the Unit by Hand

NOTICE Towing the unit while the transmissions are engaged will cause transmission damage. Do NOT use another vehicle to push or pull this unit.

This unit is equipped with two transmission release levers.

1. Depress the neutral return pedals to return the transmissions to NEUTRAL, disengage the PTO, engage the parking brake, turn the ignition switch to OFF, and remove the key.
2. Locate the transmission release levers (A, Figure 15) by the rear wheels of the unit. There is one transmission release lever for each transmission. The transmission release levers open and close the transmission bypass valves.

Not for Reproduction

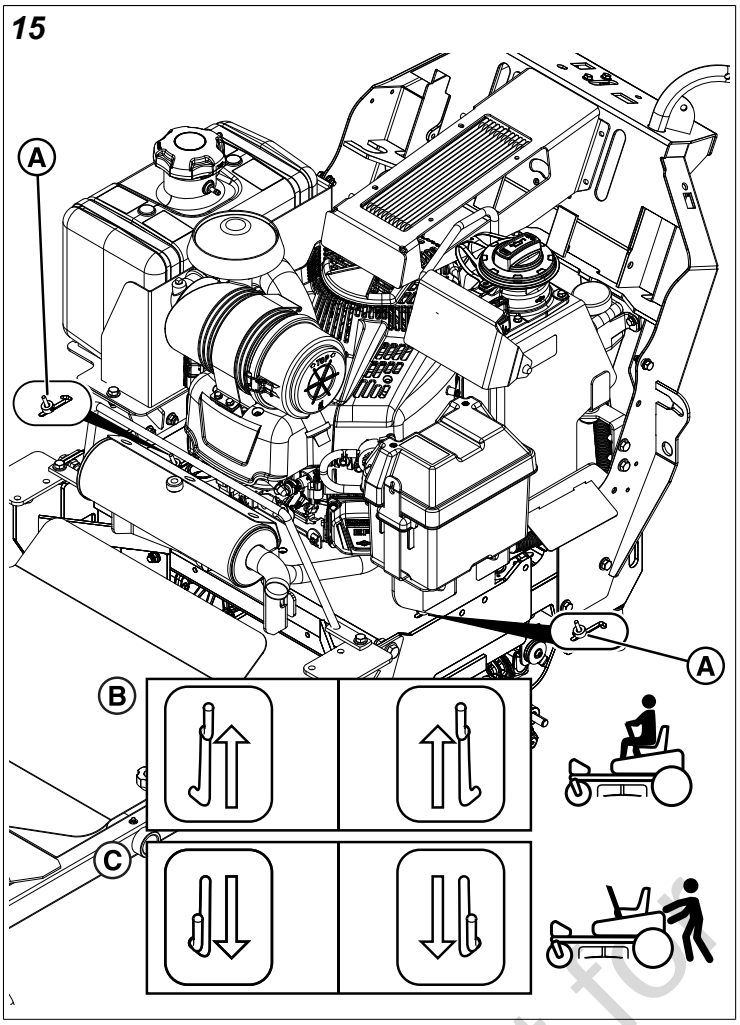

3. To open the transmission bypass valve (bypass position) (C), pull the transmission release lever back and out so they lock in the bypass position. Repeat the process for the other side of the unit.
4. Disengage the parking brake. The unit can now be pushed by hand.
5. After moving the unit, close the bypass valve (run position) (B) by pulling the transmission release levers rearward and inward (B) to release them from the bypass position and then allow them to move to the run position.

Note: Both transmission release levers must be in the same position.

Storage

Temporary Storage (30 Days or Less)

Remember, the fuel tank will still contain some fuel, so never store the unit indoors or in any other area where fuel vapor could travel to any ignition source. Fuel vapor is also toxic if inhaled, so never store the unit in any structure used for human or animal habitation.

WARNING

Never store the unit, with fuel in the engine or fuel tank, in a heated shelter or in an enclosed, poorly ventilated enclosures. Fuel fumes may reach an open flame, spark or pilot light (such as a furnace, water heater, clothes dryer, etc.) and cause an explosion.

Handle fuel carefully. It is highly flammable and careless use could result in serious fire damage to your person or property.

Drain fuel into an approved container outdoors away from open flame or sparks.

Here is a checklist of things to do when storing your unit temporarily or in between uses:

- Park the unit on a flat level surface. Disengage the PTO, engage the parking brake, turn the ignition switch to OFF, and remove the ignition key.
- Keep the unit in an area away from where children may come into contact with it. If there's any chance of unauthorized use, remove the spark plug(s) and put in a safe place. Be sure the spark plug openings are protected from foreign objects with a suitable cover.
- If the unit can't be stored on a reasonably level surface, chock the wheels.
- Clean all grass and dirt from the mower.

Long Term Storage (Longer Than 30 Days)

Before you store your unit for the off-season, read the *Fuel and Maintenance* instructions in the OPERATOR SAFETY section, then perform the following steps:

1. Drain crankcase oil while engine is hot and refill with a grade of oil that will be required when unit is used again.
2. Prepare the mower deck for storage as follows:
   A. Clean the underside of the mower deck.
   B. Coat all bare metal surfaces with paint or a light coat of oil to prevent rusting.
3. Clean external surfaces and engine.
4. Prepare the engine for storage. See the engine operator's manual.
5. Clean any dirt or grass from cylinder head cooling fins, engine housing, and air cleaner element.
6. Cover the air cleaner and exhaust outlet tightly with plastic or other waterproof material to keep out moisture, dirt, and insects.
7. Completely grease and oil unit as outlined in the *Lubrication* section.
8. Clean up the unit and apply paint or rust preventative to any areas where paint is chipped or damaged.
9. Make sure that the battery is fully charged. Battery life will be increased if it is removed, put in a cool, dry place and fully charged about once a month. If battery is left in unit, disconnect the negative cable.
10. Drain fuel system completely or add a fuel stabilizer to the fuel system. If you have chosen to use a fuel stabilizer

Not for Reproduction

and have not drained the fuel system, follow all safety instructions and storage precautions in this manual to prevent the possibility of fire from the ignition of gasoline fumes. Remember, fuel fumes can travel to distant sources of ignition and ignite, causing risk of explosion and fire.

Note: Fuel, if permitted to stand unused for extended periods (30 days or more), may develop gummy deposits which can adversely affect the engine carburetor and cause engine malfunction. To avoid this condition, add a fuel stabilizer to the fuel tank and run the engine a few minutes, or drain all fuel from the unit before placing it in storage.

Starting After Long Term Storage

Before starting the unit after it has been stored for a long period of time, perform the following steps.

1. Remove any blocks from under the unit.
2. Install the battery if it was removed.
3. Unplug the exhaust outlet and air cleaner.
4. Fill the fuel tank with fresh fuel. See engine operator's manual for recommendations.
5. See engine operator's manual and follow all instructions for preparing engine after storage.
6. Check crankcase oil level and add proper oil if necessary. If any condensation has developed during storage, drain crankcase oil and refill.
7. Inflate tires to proper pressure. Check fluid levels.
8. Start the engine and let it run slowly. DO NOT run at high speed immediately after starting. Be sure to run engine only outdoors or in well ventilated area.

Maintenance Schedule

The following schedule should be followed for normal care of your unit. You will need to keep a record of your operating time. Determining operating time is easily accomplished by observing the hour meter.

If your unit is equipped with a dual function hour meter that displays both engine hours and PTO hours, the maintenance intervals are based on the engine hours as displayed by the hour meter.

UNIT MAINTENANCE
Before each use
Check safety interlock system.
Check unit brakes.
Check unit for loose hardware.
Check hydraulic oil level.
Check tire pressures.
Every 25 Hours
Clean mower deck and check / Replace mower blades.*
Lubricate unit and mower deck.*
Every 100 Hours
Check mower blade stopping time.
Clean Battery & Cables (if equipped)
Initial Change of Hydraulic Oil.

UNIT MAINTENANCE
Every 400 Hours of Yearly
Change hydraulic oil filter.
Check / Adjust belt tensions.

ENGINE MAINTENANCE
Before each use
Check engine oil level.
Clean visible debris from engine compartment.
Every 50 Hours
Inspect / Clean spark arrester.**
Every 100 Hours
Check fuel filter.
Refer to engine owner's manual
Service air filter.
Change engine oil and filter.
Check / Replace spark plugs.

* More often in hot (over 85° F; 30° C) weather or dusty operating conditions.
**If equipped. Replace if damaged.

Maintenance Procedures

Service and Maintenance Safety

WARNING

Amputation and crushing hazard

Specific steps must be taken in order to perform service and maintenance procedures safely.

Read and follow all the applicable safety and instructional messages in this manual.

Always disengage the mower blades, set the parking brake, turn the engine OFF, remove the ignition key, and wait for all movement to stop prior to performing service and maintenance procedures.

Always disconnect the spark plug wire(s) and fasten it away from the plug before beginning any maintenance or service procedures on order to prevent accidental ignition.

Before Maintaining Your Unit

Units Equipped with Electronic Fuel Injected Engines:

If electric welding on vehicle, remove battery negative cable (black) from battery negative (-) terminal, and disconnect the ECM electrical connector(s). If welding on the muffler, also disconnect the O2 sensor electrical connector and remove the O2 sensor from the muffler.

Checking Tire Pressures

Tire pressure should be checked periodically, and maintained at the levels shown in the Specifications chart. Note that these pressures may differ slightly from the "Max Inflation" stamped on the side-wall of the tires. The pressures shown provide proper traction and extend tire life.

Not for Reproduction

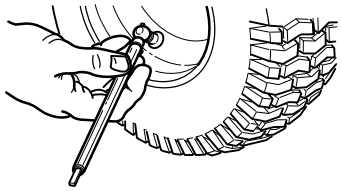

Checking / Adding Fuel

Fuel and its vapors are extremely flammable and explosive.

Fire or explosion can cause severve burns or death.

Gasoline is highly flammable and must be handled with care. Never fill the tank when the engine is still hot from recent operation. Do NOT allow open flame, smoking or matches in the area. Avoid over-filling and wipe up any spills.

To add fuel:

1. Stop the engine and allow it to cool for at least 3 minutes.
2. Remove the fuel cap.
3. Fill the tank to the bottom of the filler neck. This will allow for fuel expansion.
   NOTE: *Do not overfill. Refer to your engine manual for specific fuel recommendations.*
4. Install and hand tighten the fuel cap.

Replacing the Fuel Filter

WARNING

Fuel and its vapors are extremely flammable and explosive.

Fire or explosion can cause severe burns or death.

Do NOT remove the fuel filter when the engine is hot, as spilled gasoline may ignite. Do NOT spread hose clamps further than necessary. Ensure clamps grip hoses firmly over filter after installation.

Carbureated Models: The fuel filter is located in the fuel line between fuel tank and carburetor, near the fuel pump.

Fuel Injected Models: The fuel filter is located in the fuel line between the fuel tank and fuel pump.

If filter is dirty or clogged, replace as follows:

1. Disconnect the negative battery cable.
2. Place a container below the filter to catch spilled fuel.
3. Using a pliers, open and slide hose clamps from fuel filter.
4. Remove hoses from filter.
5. Install new filter in proper flow direction in fuel line.
6. Secure with hose clamps.
7. Reconnect the negative battery cable when finished.

Check Engine Oil Level

Interval: Before Each Use

Refer to the engine operator's manual for dipstick and oil fill locations and specific engine oil check and fill procedures.

Briggs & Stratton Vanguard Engines with Remote Oil Tank (Select Models)

Some models in this series of mower feature a remote oil tank (A, Figure 16) that supplies oil to the engine. Units equipped with a Vanguard engine with remote oil tank are factory filled with specially formulated Vanguard 15W-50 synthetic oil.

Note: This specific grade of oil is not required to keep engine warranty in effect.

For more information regarding this engine and other operational and maintenance information, please refer to the engine operator's manual included with your unit.

16

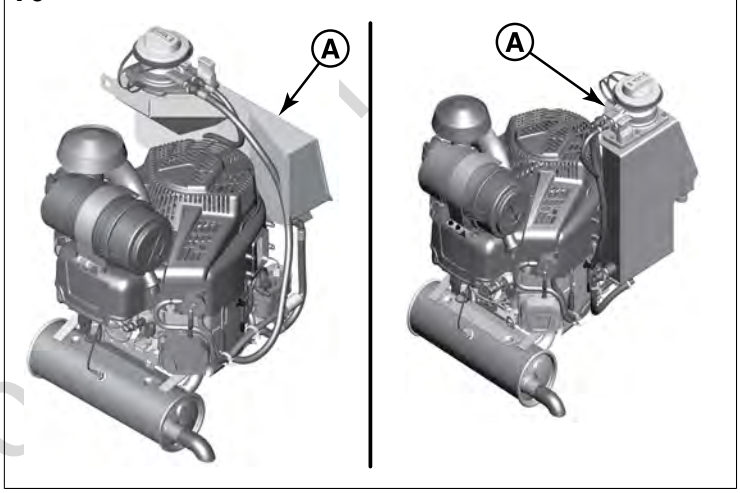

Changing the Engine Oil and Filter (Engines with Remote Oil Tank)

Engine Oil Type: 15W-50 synthetic oil. (See the engine oil operator's manual for other oil recommendations.)

Engine Oil Change Amount: 5 qt (4,73 L).

Oil Change Interval: Every 500 hours

Important: Always make sure that the mower is parked on a flat, level surface when check the engine oil level.

1. Park the machine on a flat, level surface. Depress the neutral return pedals to return the transmissions to neutral, disengage the PTO, and engage the parking brake. Allow the engine to run until it is warm. This will warm the oil so it will drain better. Turn the ignition switch to OFF, remove the ignition key, and wait for all moving parts to stop before leaving the operator's position.
2. Clean the area around the engine oil dipstick (A, Figure 17) and oil fill cover (B) to remove any debris.

Not for Repro

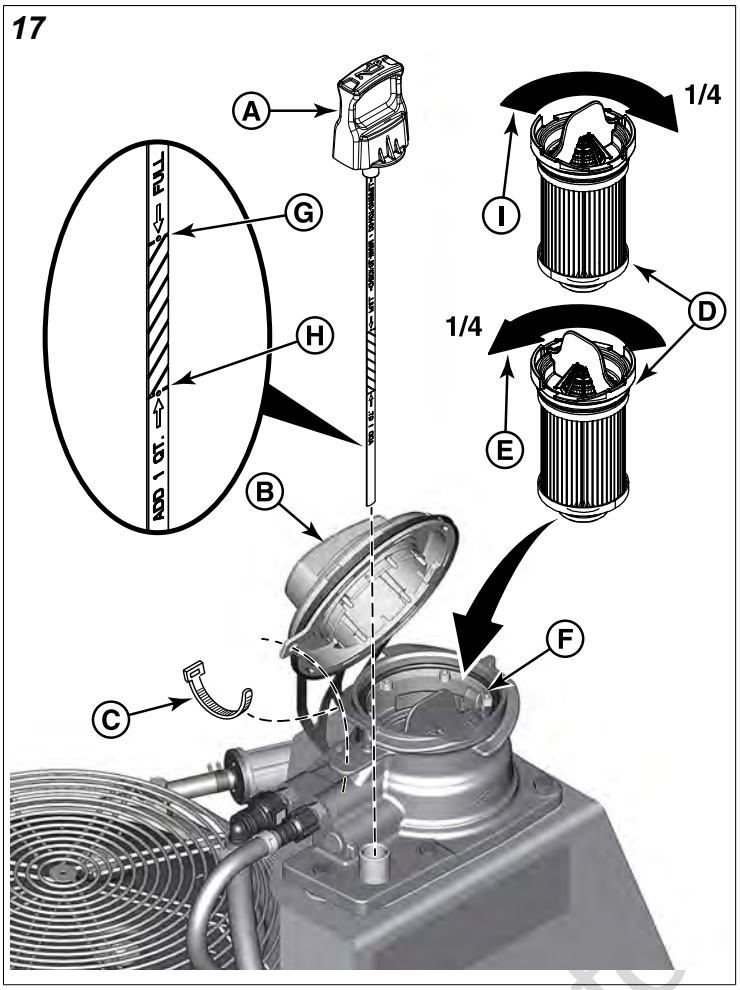

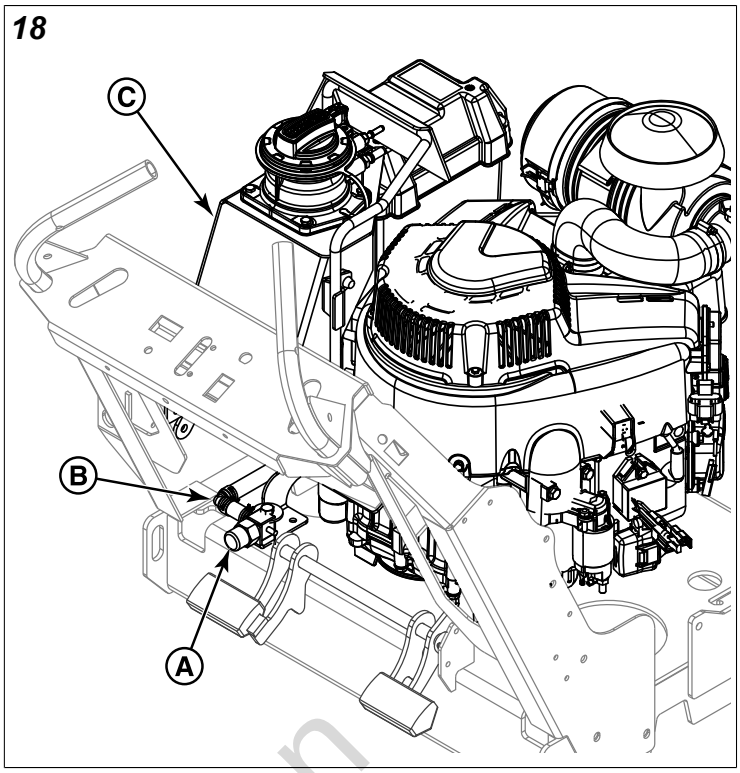

3. Remove the engine oil dipstick and wipe with a clean cloth.
4. Cut the self-locking tie (C) that keeps the oil fill cover securely closed. Open the oil fill cover.
5. Have a suitable container ready to capture dripping oil from the engine oil filter (D) after it is removed. Remove the oil filter by turning it **counter-clockwise** a 1/4 turn (E) and then pulling up. Dispose of the used oil filter properly.
6. This mower is equipped with an oil drain valve (A, Figure 18) that is used to drain the oil from the remote oil tank. The oil drain valve is located at the end of the oil drain hose (B) which is connected to the bottom of the remote oil tank (C). To drain the oil, remove the oil drain hose from it's storage location and route over the back of the engine deck. To catch the drained engine oil, place a suitable container underneath the oil drain valve.
7. Remove the cap from the drain spout of the oil drain valve.
8. To operate the oil drain valve, turn **counter-clockwise** to open and drain the engine oil into a suitable container.
9. After the engine oil has drained, turn the oil drain valve **clockwise** to close and re-install the cap on the oil drain valve.
10. Pour oil into the engine oil fill (F, Figure 17). The remote oil tank is designed to hold 5 qt (4,73 L) of engine oil.
11. Install the engine oil dipstick (A, Figure 19) into the tank by pressing down firmly with your hand. The engine oil dipstick has a detent (B) and it must snap into place on the lip (C) of the tank housing so that the dipstick is fully installed into the tank. This action requires moderate force.

Not for Reproduction

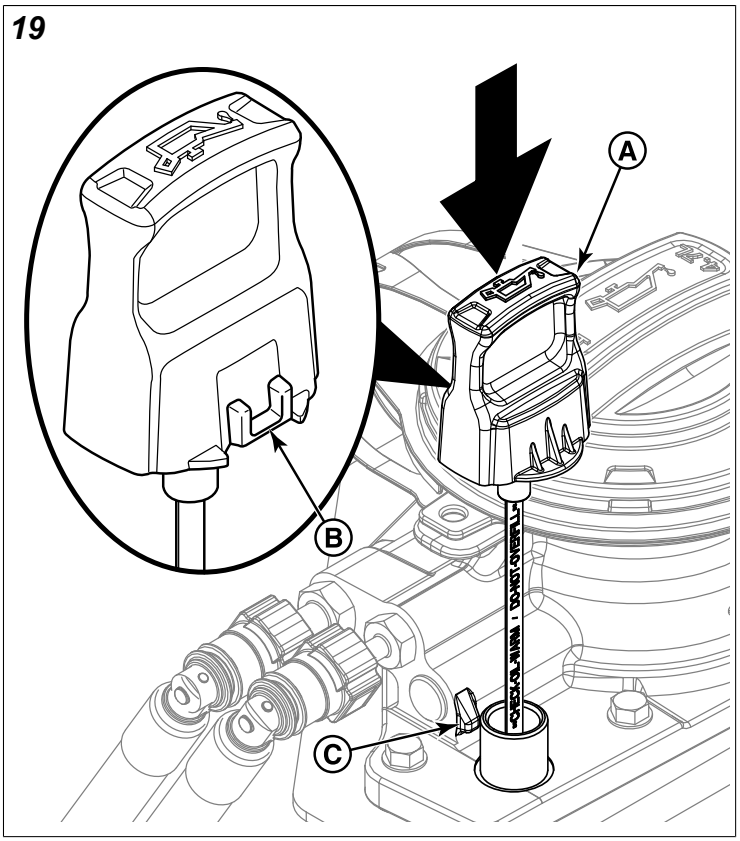

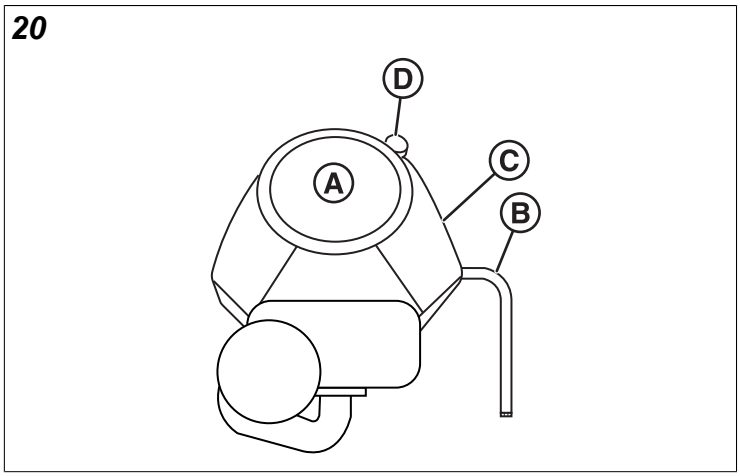

12. Remove the engine oil dipstick and check the oil level. Maximum oil level is the "FULL" line (G, Figure 17) on the dipstick. If the oil level is at or below the "ADD 1 QT." line (H), add more oil.
13. Re-install the dipstick.
14. Install a new engine oil filter by lowering it into the engine oil fill and then turning **clockwise** a 1/4 turn (I).
15. Close the oil fill cover.
16. Start and run the engine. As the engine warms up, check for oil leaks.
17. Stop the engine and check oil level. Add more if necessary.
18. If desired, a new self-locking tie can be installed to keep the oil fill cover securely closed.

Changing the Engine Oil and Filter (Kawasaki Models)

This series of mower also features a Kawasaki FX Series (A, Figure 20) engine option. Please reference Figure 20 as the location of the components for this procedure may vary by specific engine option.

1. Warm engine by running for a few minutes. Refer to the engine operator's manual for oil and filter replacement instructions.
2. Route the oil drain hose (B) over the rear end of the engine deck.
3. Place a small pan under the oil drain hose to catch the oil. Using the appropriate tools, remove the cap from the oil drain hose and drain the engine oil into the pan.
4. After draining, replace the cap and wipe up any spilled oil. Position the oil drain hose so that it is facing towards the back of the machine.
5. Place an absorbent shop cloth under the engine oil filter (C). Remove the engine oil filter and replace with a new one.
6. Remove the oil dipstick (D) and refill with oil. (Refer to the engine operator's manual for oil recommendations.)
7. Remove the shop cloth and wipe up any spilled oil.

Clean the Engine Compartment Area with Pressurized Air and Water

Pressurized air and/or water can cause debris and/or hot water to be blown out. This action could result in personal injury.

When pressurized air and/or pressurized water is used for cleaning wear protective clothing, protective shoes, and eye protection. Eye protection includes goggles or a protective face shield.

The maximum air pressure for cleaning purposes must be below 205 kPa (30 psi). The maximum water pressure for cleaning purposes must be below 275 kPa (40 psi).

Engine Maintenance

For engine maintenance schedules and procedures, please refer to the engine operator's manual.

Containing Spilled Fluids and Proper Disposal of Waste

Make sure that fluids are contained when performing inspection, maintenance, testing, adjustment, and repair of the unit. Be prepared to collect the fluid with suitable

Not for Reproduction

leakproof containers before opening or disassembling any component containing fluids. Do not pour waste onto the ground, down a drain, or into any source of water.

Improper disposal of waste can threaten the environment. Dispose of all fluids according to local regulations and mandates.

Electronic Fuel Injection (EFI) System - EFI Models

EFI is an electronically-controlled fuel management system which is monitored by an Electronic Control Unit (ECU). A Malfunction Indicator Lamp (M.I.L.) will illuminate if problems or faults are detected. Servicing by an authorized dealer is necessary.

CAUTION

Do not disconnect or reconnect ECU wiring harness connector or any individual components with the ignition switch in the "ON" position. This can send a damaging voltage spike through the ECU.

Unplug harness from ECU before performing any welding on equipment.

Accessing the Engine Compartment

The fuel tank mount (A, Figure 21) is a two-piece design that allows for the fuel tank and fuel tank mount to be pivoted away from the unit to allow for more access to the engine compartment.

21

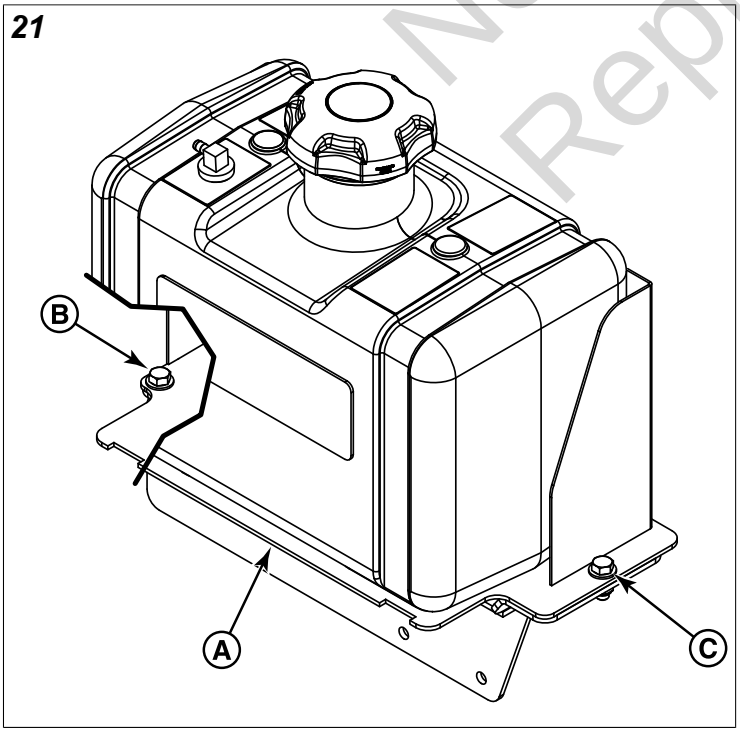

1. Loosen the pivoting hardware (B).
2. Remove the securing hardware (C).
3. Pivot the fuel tank and fuel tank mount away from the engine. The fuel tank has a stop bolt that will prevent it from being turned too far away.
4. Pivot the fuel tank and fuel tank mount back in place and re-install the securing hardware.
5. Tighten both the securing hardware and pivoting hardware.

Lubrication

Lubricate the unit at the location shown in the following figures as well as the lubrication points listed below.

Grease Fitting Location	Quantity of Fittings
Forward Speed Control Lever Rod (A, Figure 22)	1
Drive Lever Pivots (B)	2
Parking Brake Pivots (A, Figure 23)	2
Frame Rails (A, Figure 24)	2
Deck Adjusters (B)	4
Mower Deck Spindles (A, Figure 25)	3
Front Caster Wheel Axles (See *Lubricating the Front Casters*)	2
Front Casters (See *Lubricating the Front Casters*)	N/A

Use grease fittings when present. Disassemble parts to apply grease to moving parts when grease fittings are not installed.

Not all greases are compatible. Your product is manufactured using Heavy Duty Lithium Complex EP, NLGI grade 2 grease (p/n 5109902X1). It is recommended that you service your product with similar grease. 5109902X1 is available through your normal part source. Using non-compatible grease could damage or cause premature parts failures.

Oil Application Locations
Ball Joints (C, Figure 22)
Operator Presence Flap Pivots (D)
Neutral Return Pedal Pivots (E)
Deck Lift Crank Pivots (F)
Control Rod Pivots (G)
Lower Parking Brake Rod Pivots (H)
Parking Brake Lever Pivots (B, Figure 23)
Deck Lift Linkage Rods (C, Figure 24)
Deck Lift Trunnions (D)
Discharge Chute Rod Hinge (B, Figure 25)

Generally, all moving metal parts should be oiled where contact is made with other parts. Keep oil and grease off belts and pulleys. Remember to wipe fittings and surfaces clean both before and after lubrication.

Not for Reproduction

22

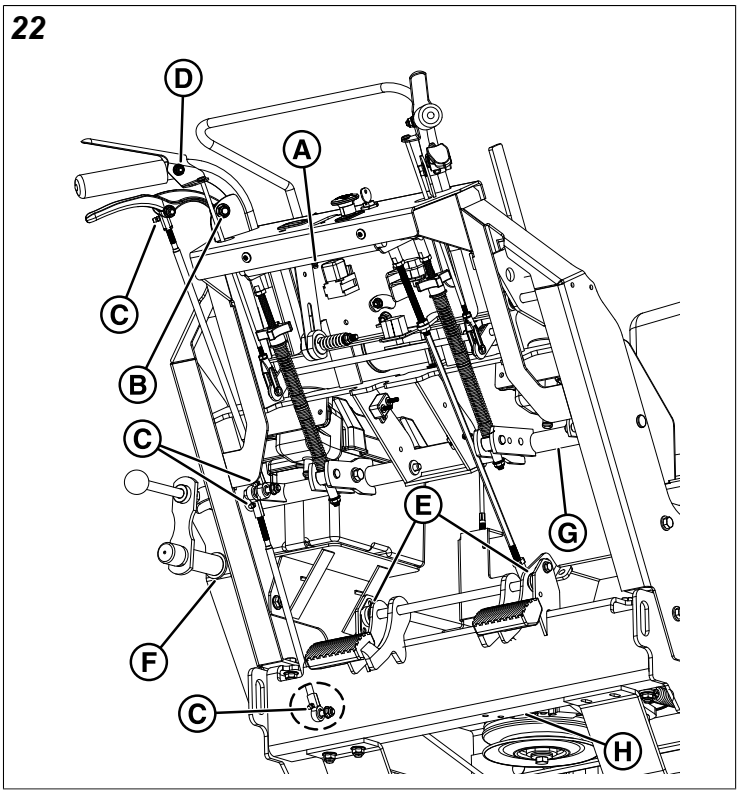

23

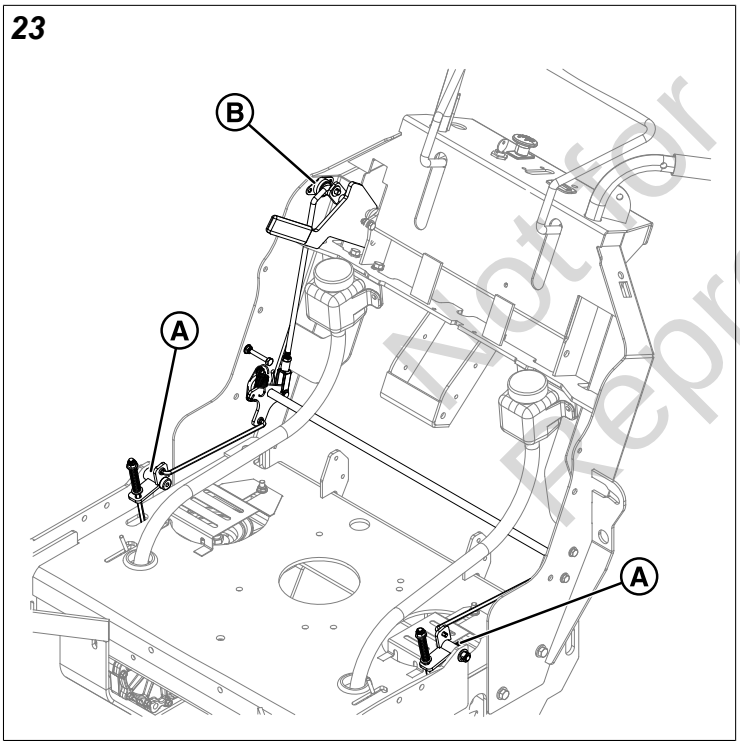

24

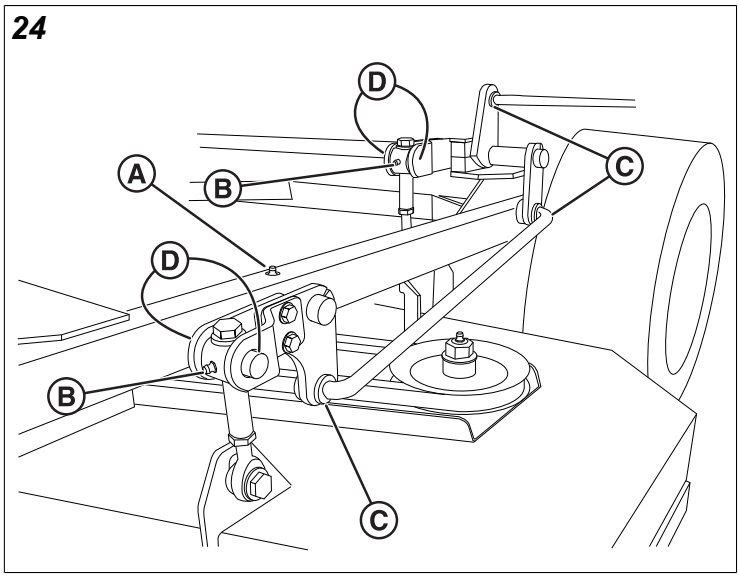

25

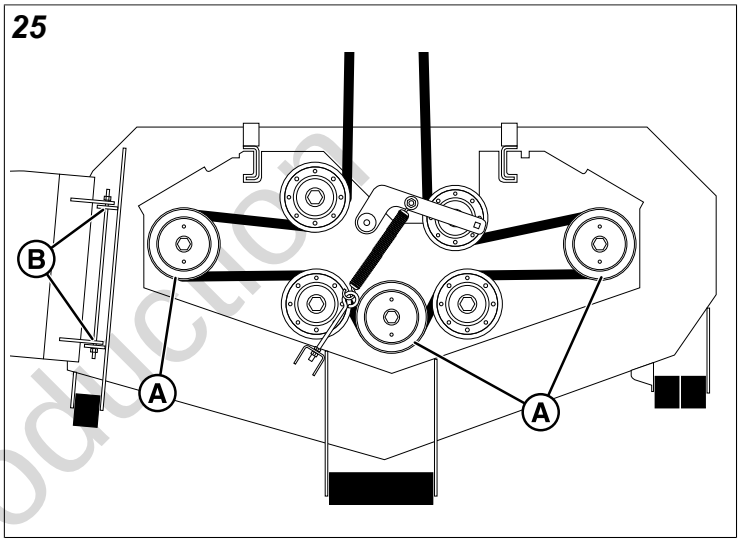

Not for Reproduction

Lubricating the Front Casters

Interval: Front caster wheel axles (A, Figure 26) - Every 25 hours.

Interval: Front caster yoke axles - Yearly.

1. Remove the 1/4-28 bolt (B, Figure 26) from the front caster and install a 1/4-28 grease fitting.

26

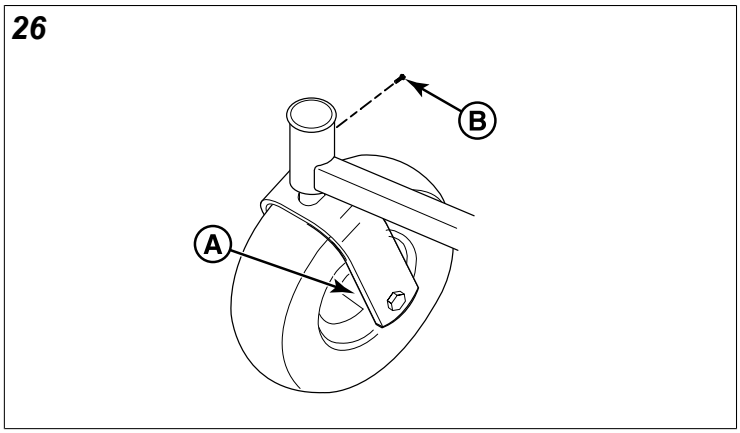

2. Grease the front caster.

3. Remove the 1/4-28 grease fitting and re-install the 1/4-28 bolt.
4. Repeat process for the other side of the unit.

Servicing the Mower Blades

Removing the Mower Blades

CAUTION

Laceration hazard

Mower blades are sharp.

Always wear gloves when handling, or working near, mower blades.

1. Use a block of wood to prevent the mower blade from turning as shown in Figure 27.

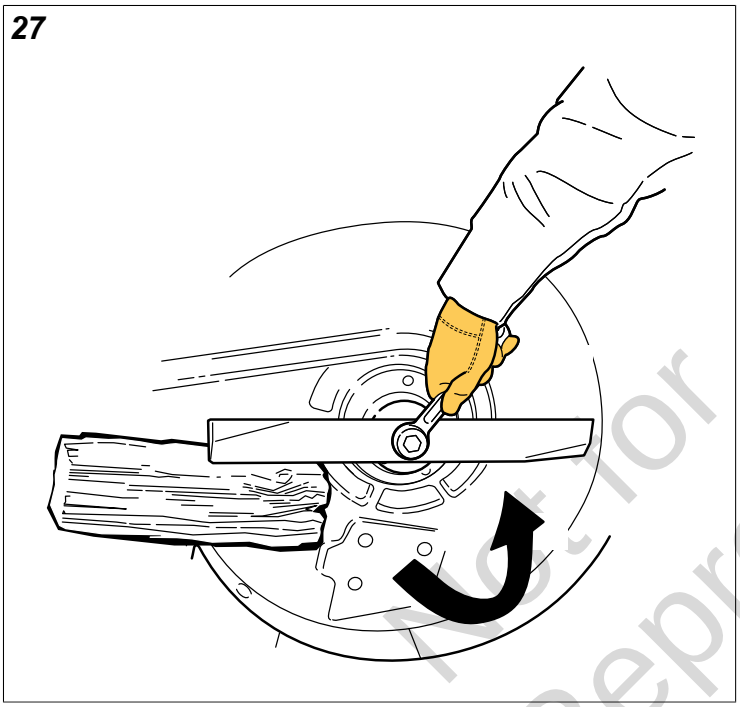

2. Using a wrench, remove the bolt securing the blade to the spindle.

Inspecting the Mower Blades

DANGER

Thrown objects hazard

Avoid injury: a worn or damaged mower blade can break and a piece of the blade could be thrown into the operator's area or bystander's area resulting in serious personal injury or death.

- Inspect the mower blade every 25 hours or at least once per year.
- If the mower blade hits a solid object, stop the engine immediately and inspect the mower blades.
- Never weld or straighten bent mower blades.

1. Remove the mower blade from the unit. See *Removing the Mower Blades*.
2. Inspect the mower blade (Figures 28 and 29). Discard the mower blade if it has any of the following conditions:
   - More than .5" (12,7 mm) of the mower blade metal has been removed from previous sharpening or wear (A, Figure 28)
   - The air lifts are excessively eroded (A, Figure 29) and the notch (B) is .25" (6,35 mm) deep or greater.
   - The mower blade is broken or bent.

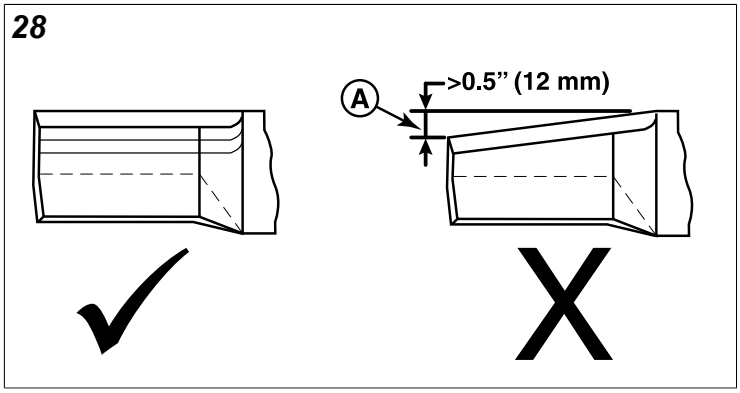

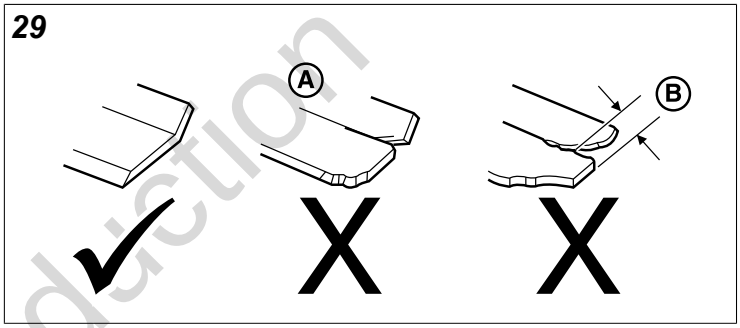

3. If the cutting edges are not sharp or have nicks, sharpen the blades. See *Sharpening the Mower Blades*.

Sharpening the Mower Blades

WARNING

Thrown objects and fire hazard

Grinding mower blades throws sparks and fine metal particles that are capable of igniting gasoline and gasoline vapors, and that can injure unprotected eyes.

Be sure all flammable materials are cleared from the area where grinding will occur.

Always wear safety glasses or goggles when grinding mower blades.

1. Sharpen mower blades with a grinder, hand file, or electric blade sharpener.
2. Sharpen the blade by removing an equal amount of material from the cutting edge of each end of the blade.
3. Keep the original bevel (A, Figure 30) when grinding. DO NOT change the mower blade bevel.

Not for Reproduction

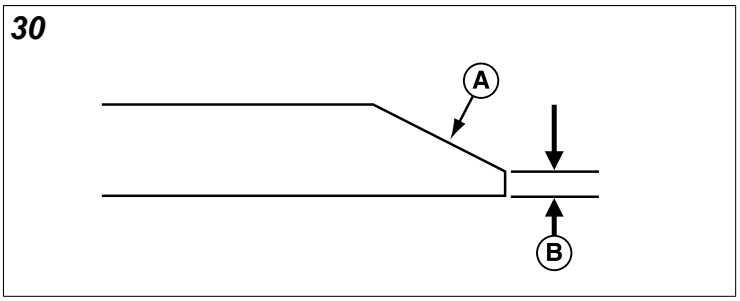

4. The mower blade should have a maximum of 1/64" (0,40 mm) cutting edge (B) or less.

Balancing the Mower Blades

CAUTION

Thrown objects hazard

An unbalanced mower blade can create excessive vibration and damage the unit, or cause mower blade failure resulting in thrown debris.

Be sure blade is balanced before installing.

1. Clean the blade to remove any dried grass or other debris.
2. Clamp a nail in a bench vise, hang the blade on the nail, and position the blade in a level horizontal position as shown in Figure 31.

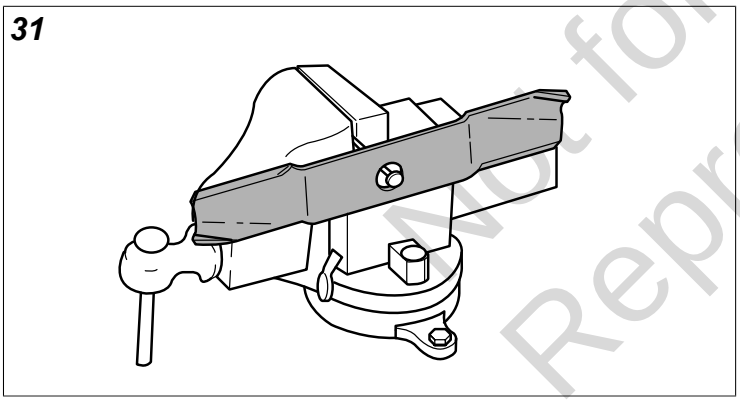

3. Check the balance of the blade. If either end of the blade moves downward the end that moves downward is heavier than the other. Sharpen the heavy end until balance is achieved. See *Sharpening the Mower Blades* for sharpening instructions.
4. Repeat the process until the mower blade remains in the horizontal, level position.

Installing the Mower Blades

CAUTION

Laceration hazard.

Mower blades are sharp.

Always wear gloves when handling, or working near, mower blades.

1. Install each mower blade with the air lifts (C, Figure 32) pointing up towards the mower deck as shown in Figure 32 and secure with the mower blade mounting bolt (A) and flat washer (B).

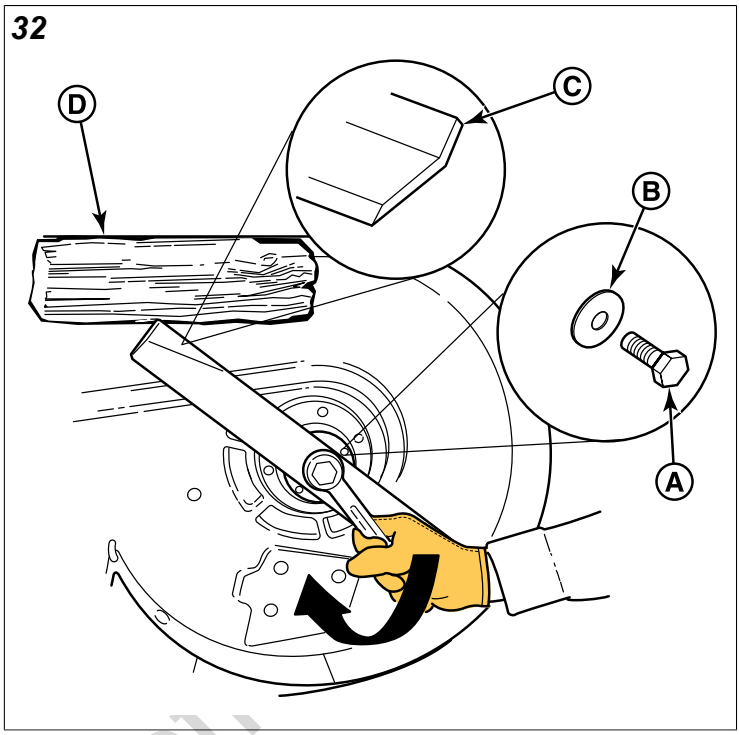

2. Wedge a wooden block (D) between the mower blade and the mower deck housing to keep the mower blade from turning and torque the blade mounting bolt to 120 ft. lbs (163 Nm).

Check / Fill Transmission Oil Level

This unit is equipped with two transmission oil tanks. One transmission oil tank supplies oil to one transmission. The level of oil in both transmission tanks must be checked, and if necessary, filled.

Oil Type: 20W-50 conventional detergent motor oil.

1. Locate the transmission oil tanks (A, Figure 33) located on the handle bar assembly.

Not for Reproduction

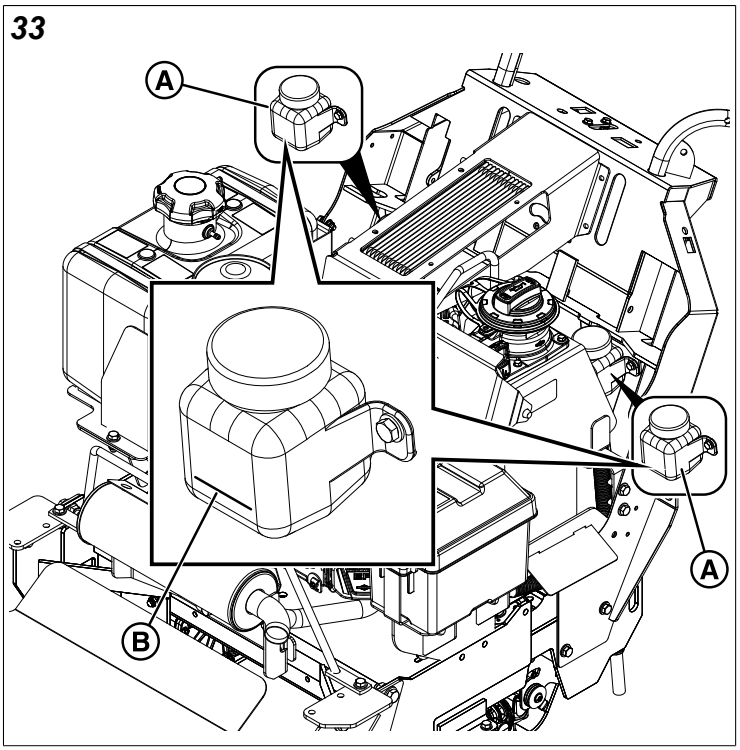

2. Check the oil level when the unit is cold. The oil should be up to the “FULL COLD” mark (B) on the transmission oil tanks. If the oil is below this level, proceed to step #3.
3. Before removing the tank caps, make sure the area around the tank cap and fill neck of the tank is free of dust, dirt, or other debris. Remove the tank cap.
4. Add oil up to the “FULL COLD” mark (B).
5. Reinstall the tank caps.
6. After adding oil to the tanks, it may be necessary to purge air from the hydraulic system. If the unit is not driving properly perform the *Purging the Air from the Hydraulic System* procedure.

Transmission Oil Filter Change

Change Interval: Every 400 Hours or Yearly (Initial transaxle oil and filter change after first 100 hours of operation).

Replacement Filter Number: 5101026X1

Note: **Removing the oil filter from the transaxle will drain the oil in the oil tank and the lines routed to the oil cooler. Have a suitable container ready to catch the drained oil. The manufacturer recommends that this be a dealer-only service item.**

1. Park the unit on a flat, level surface such as a concrete floor. Engage the parking brake, disengage the PTO, turn the ignition switch to OFF, and remove the ignition key.
2. Chock the front tires of the unit. Raise the rear of the unit so that the rear tires clear the ground and secure the unit with jack stands.

Note: **It is recommended that the hydraulic oil change be performed on one transaxle at a time.**

3. Locate the left transaxle oil filter (A, Figure 34) underneath the rear of the machine on the left transaxle.

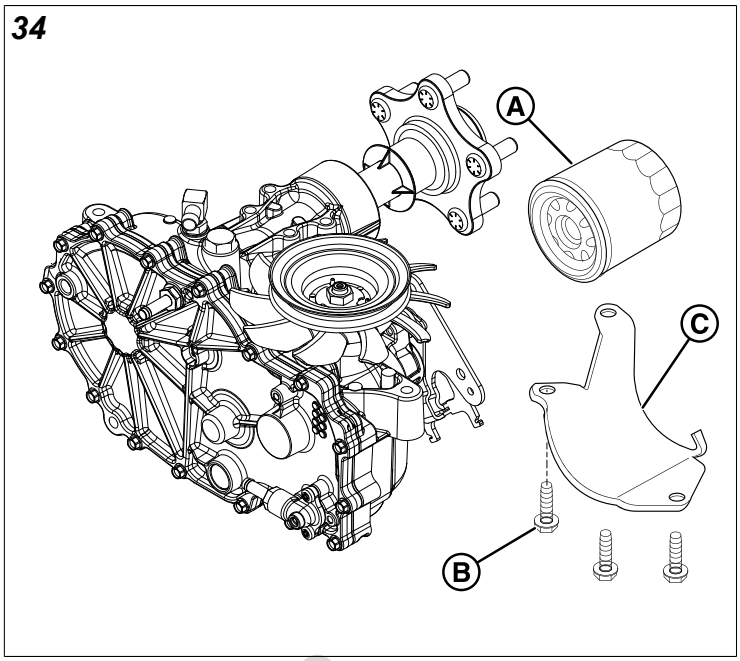

4. If equipped, remove the three (3) 1/4” filter guard screws (B) and the filter guard (C).
5. Clean the area around the filter base and remove the filter.
6. Apply a film of new oil to the gasket of the new replacement filter. After the oil has drained, clean the area where the filter gasket will seat and then thread the new filter onto the filter base until the gasket makes contact, then tighten 3/4 of a turn more.
7. If equipped, re-install the filter guard with the three 1/4” filter guard screws.
8. Remove the dust cap (A, Figure 35) from the center port of the transaxle service valve.

Not for Reproduction

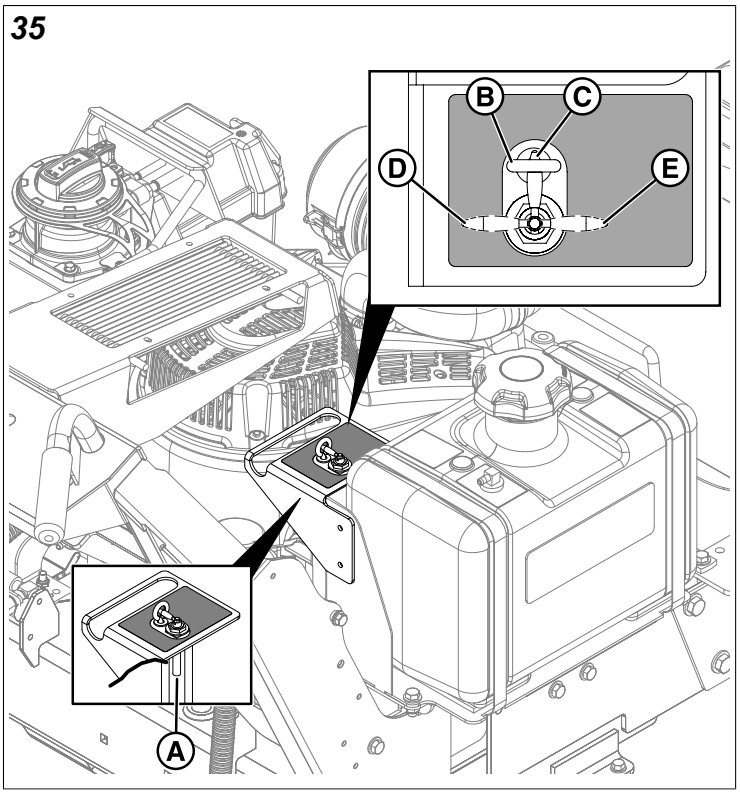

9. To add oil to the system, use a hand pump that is rated at less than 10 psi (0,7 bar). A pump rated at or above 10 psi (0,7 bar) could damage the transaxle service valve. Install the hose of the hand pump assembly to the center port of the transaxle service valve.

NOTICE **Do not add oil to the system through the transmission oil expansion tanks after draining the oil from the transaxle. The oil must be added through the transaxle service valve.**

10. Rotate the transaxle service lock (B) **clockwise** to release the lever. Rotate the lever (C) **counter-clockwise** to the position labelled as "LH" on the decal as referenced as "D" in Figure 35.
11. Add 2 quarts (1,9 L) of oil through the center port of the transaxle service valve using the hand pump.
12. Make sure that the transaxle release levers are in the engaged (run) position. See *Pushing the Unit by Hand*.
13. Start the engine and allow the engine a few moments to warm up, position the throttle in the FAST position and allow it to run for thirty (30) seconds.
14. Position the throttle in the SLOW position and turn the ignition switch to OFF to stop the engine.
15. Using the hand pump add more oil into the system until the oil level reaches the "FULL COLD" mark on the hydraulic oil expansion tank.
16. Rotate the lever (B) **clockwise** to the OFF position. Rotate the transaxle service lock **counter-clockwise** to lock the lever in place.
17. Perform steps #3 through #7 on the right hand transaxle.
18. Rotate the transaxle service lock (B) **counter-clockwise** to release the lever. Rotate the lever **clockwise** to the position labelled as "RH" on the decal as referenced as "E" in Figure 35.
19. Perform steps #11 though #15 to add oil to the right hand transaxle and lines.
20. Rotate the lever **counter-clockwise** to the OFF position. Rotate the transaxle service lock **clockwise** to lock the lever in place.
21. Disconnect the hose of the hand pump from the transaxle selector valve and install the dust cap (A) onto the port.
22. Perform the *Purging the Air from the Hydraulic System* procedure.
23. Keep an eye on the oil level in the transmission oil expansion tanks as it will be necessary to add oil into the tanks as the unit is run for the next few days. When adding more oil to the system, you can add it by removing the caps from the transmission oil expansion tanks and adding oil until it reaches the "FULL COLD" mark and then install the cap.

Purging the Air from the Hydraulic System

Due to the effects air has on efficiency in hydraulic drive systems, it is critical that it be purged from the system. These purge procedures should be implemented any time a hydraulic system has been opened to facilitate maintenance or any additional oil has been added to the system.

The resulting symptoms of air in the hydraulic system may be:

- Noisy operation.
- Lack of power or drive after short term operation.
- High operation temperature and excessive expansion of oil.

Before starting, make sure the transaxles/transmissions are at the proper oil levels. If it is not, fill to the specifications outlined in the *Check / Fill Transmission Oil Level* procedure.

Purging Air from the Hydraulic System:

1. Chock the front wheels to prevent the machine from rolling. Raise the rear of the machine so that the vehicle's rear tires do not contact the ground. Position jack stands under the rear of the machine to secure it.
2. Open the transaxle's bypass valves (see *Pushing the Unit by Hand* for the location and function of the bypass valves), start the engine, release the parking brake, and slowly move the unit's control levers in both forward and reverse directions (5 to 6 times), as air is purged from the unit, the oil level will drop.
3. Depress the neutral return pedals to return the transmissions to neutral, stop the engine, and engage the parking brake.
4. Close the transaxle's bypass valves, start the engine, release the parking brake, and slowly move the unit's control levers in both forward and reverse directions (5 to 6 times), as air is purged from the unit, the oil level will drop.
5. Stop the engine. Remove the jack stands from underneath the machine.

Not for Reproduction

6. Repeat the process detailed above but with the unit's drive wheels on the ground. The procedure should be performed in an area free of any objects or bystanders.

It may be necessary to repeat the process detailed above until all the air is completely purged from the system. When the transaxles/transmissions operate at normal noise levels and move smoothly forward and reverse at normal speeds, then the transaxles/transmissions are considered purged.

Neutral Adjustment & Tracking Adjustment

If the unit "creeps" while the forward speed control lever is in the neutral position, then it may be necessary to adjust the adjustment linkage rods.

The illustration depicts the left side of the machine.

Neutral Adjustment

1. Park the mower on a flat level surface such as a concrete floor, away from bystanders and preferably facing a wall. Disengage the PTO, engage the parking brake, turn the ignition switch to OFF and remove the key.
2. Chock the front caster wheels. Raise the drive wheels off the ground and secure the mower with jack stands.
3. Start the engine and adjust the throttle control to the SLOW position. See *Starting the Engine* section for proper starting instructions.
4. Loosen the jam nuts (A, Figure 36) that are tightened against the ball joints (B).

36

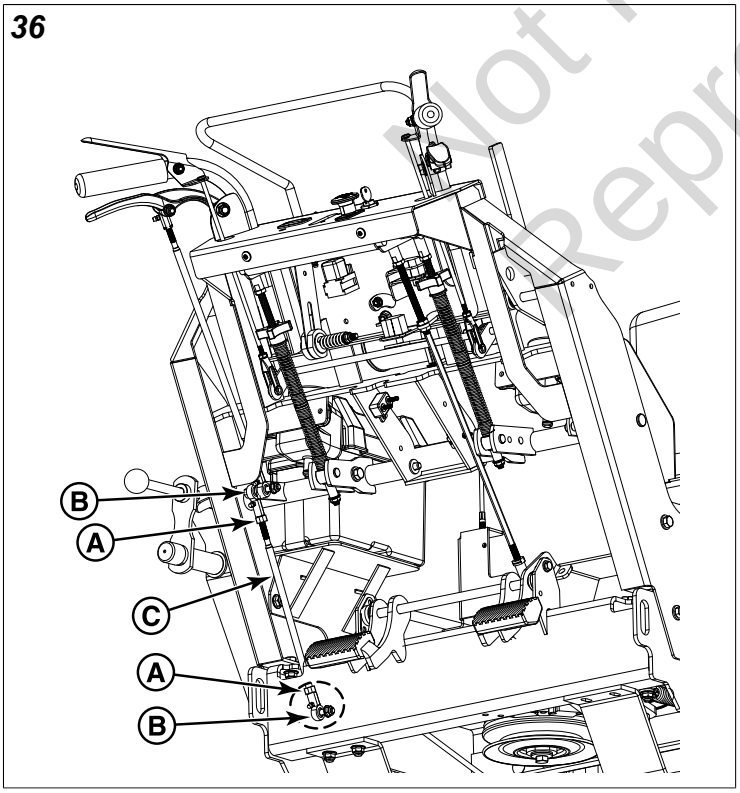

5. Disengage the parking brake.
6. Slowly turn the adjustment linkage rod (C) **clockwise** until the drive tire begins to rotate backwards.
7. Slowly turn the adjustment linkage rod **counter-clockwise** until the drive tire begins to rotate forward.
8. Set the adjustment halfway in between where the forward and backwards rotations begin.
9. Re-tighten the jam nuts.
10. Perform this adjustment for the other side of the mower.
11. Adjust the throttle control to FULL (highest setting). Cycle the forward speed control lever and the neutral return pedals several times to insure an accurate adjustment has been made.
    - If the mower still creeps, perform the adjustment procedure again.
    - If the mower does not creep, no further neutral adjustments are necessary.

Tracking Adjustment

Before making a tracking adjustment, be sure to check the following:

- Drive tires are properly inflated.
- Caster tires are lubricated and turn freely.
- All controls are free from damage and operate freely.
- Machine is at full operating temperature.
- Make sure the machine is in neutral when the foot pedal is depressed. If not, adjust neutral as described above.

If machine veers to the LEFT:

1. Loosen the jam nuts (A, Figure 36) that are tightened against the ball joints (B).
2. Turn the LEFT adjustment linkage rod 1/8 - 1/4 turn **counter-clockwise**.
3. Turn the RIGHT adjustment linkage rod 1/8 - 1/4 turn **clockwise**.
4. Re-tighten the jam nut.
5. Drive machine on a flat, level surface to test and repeat steps 1 - 4 as necessary.

If machine veers to the RIGHT:

1. Loosen the jam nuts (A, Figure 36) that are tightened against the ball joints (B).
2. Turn the RIGHT adjustment linkage rod 1/8 - 1/4 turn **counter-clockwise**.
3. Turn the LEFT adjustment linkage rod 1/8 - 1/4 turn **clockwise**.
4. Re-tighten the jam nut.
5. Drive machine on a flat, level surface to test and repeat steps 1 - 4 as necessary.

Drive Levers - Control Responsiveness Adjustment

This mower is equipped with drive lever spring assemblies (A, Figure 37) that control the level of responsiveness of the controls to the transmissions. The drive levers (B) are factory

Not for Reproduction

preset for normal operation. The spring assemblies can be adjusted equally to improve the responsiveness of the drive levers under more adverse operating conditions.

The drive lever spring assemblies have a range of adjustment (C) from the factory preset position of 7" (17,8 cm) to the maximum position of 6-1/2" (16,5 cm). These measurements are taken by measuring the length of the spring (D).

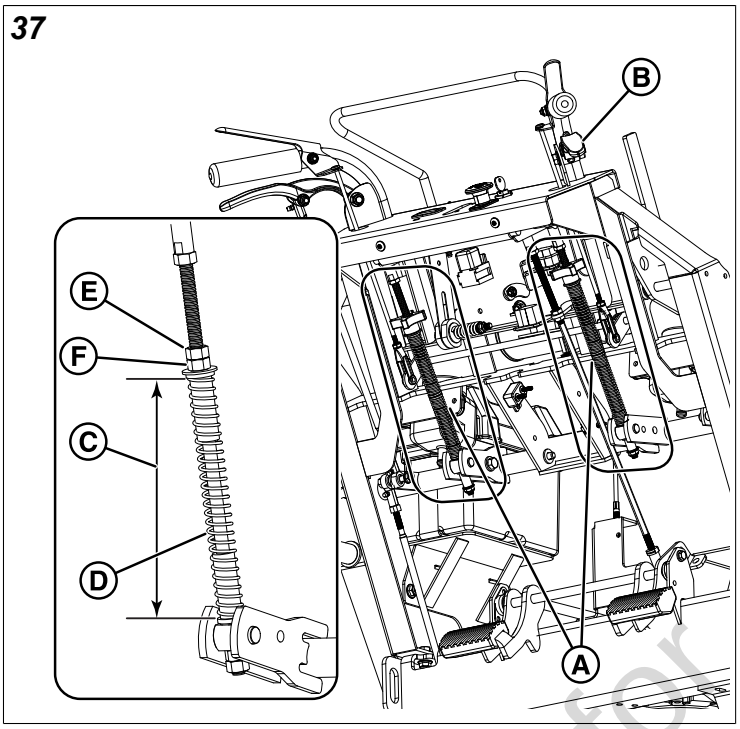

To increase the level of responsiveness:

1. Park the mower on a flat level surface such as a concrete floor. Depress the neutral return pedals to return the transmissions to neutral, disengage the PTO, engage the parking brake, turn ignition switch to OFF, and remove the key.
2. Loosen the jam nut (E, Figure 37) that is tightened against the adjustment nut (F).
3. Turn the adjustment nut **clockwise** until the desired level of responsiveness is achieved.
4. Measure the length (C) of the spring (D) and record this measurement. This measurement cannot be shorter than 6-1/2" (16,5 cm).
5. Tighten the jam nut against the adjustment nut.
6. Repeat this process for the other side of the mower. The measurements for both drive lever spring assemblies must be the same.

To decrease the level of responsiveness:

1. Park the unit on a flat level surface such as a concrete floor. Depress the neutral return pedals to return the transmissions to neutral, disengage the PTO, engage the parking brake, turn ignition switch to OFF, and remove the key.
2. Loosen the jam nut (E, Figure 37) that is tightened against the adjustment nut (F).
3. Turn the adjustment nut **counter-clockwise** until the desired level of responsiveness is achieved
4. Measure the length (C) of the spring (D) and record this measurement. This measurement should not be longer than 7" (17,8 cm).
5. Tighten the jam nut against the adjustment nut.
6. Repeat this process for the other side of the mower. The measurements for both drive lever spring assemblies must be the same.

Drive Levers - Placement Adjustment

There should be approximately 1" (2.54 cm) of clearance between the handle bars and the drive levers when the forward speed control lever is in the neutral position.

To adjust:

1. Park the unit on a flat level surface such as a concrete floor. Disengage the PTO, engage the parking brake, turn the ignition switch to OFF and remove the key.
2. Loosen the jam nuts (A, Figure 38) that are located on the top and the bottom of the reversing linkage rod.

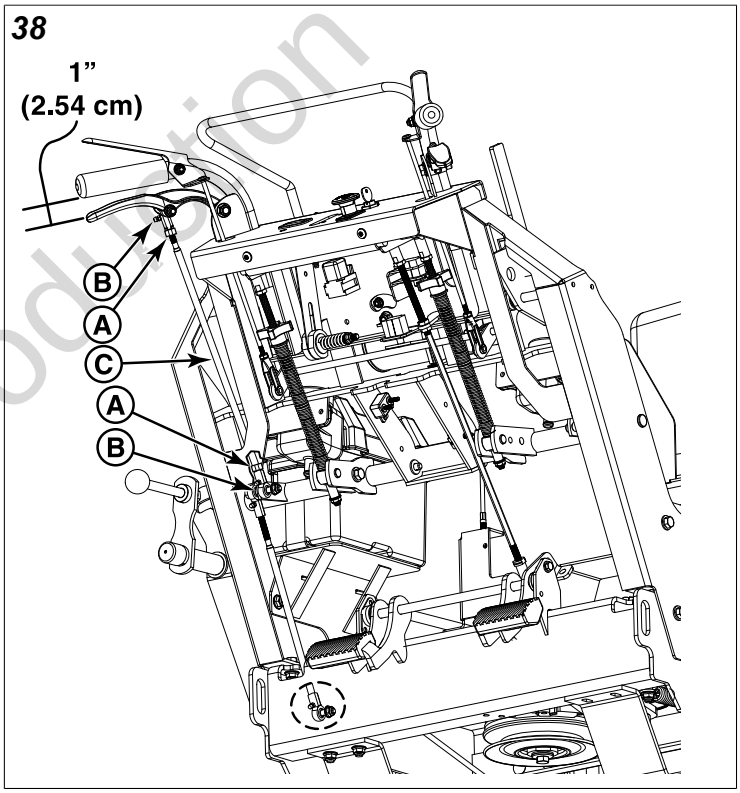

3. Adjust the linkage rod.
   - To increase the amount of clearance between the handle bars and the drive levers, turn the linkage rod (A) **counter-clockwise**.
   - To decrease the amount of clearance between the handle bars and the drive levers, turn the linkage rod **clockwise**.
4. Once the measurement of 1" (2.54 cm) is achieved, tighten the jam nuts against the linkage rod ball joints.
5. Repeat the process for the other side of the unit.

Note: Both drive levers should be adjusted equally.

Not for Reproduction

Forward Speed Control Lever Operating Force Adjustment

After adjusting the control responsiveness of the drive levers, it may be necessary to adjust the operating force of the forward speed control lever.

The amount of force necessary to operate the forward speed control lever (A, Figure 39) is adjustable so that the operator can customize it to their operating preference.

The forward speed control lever has a range of adjustment (B) from the factory preset position of 1-7/8” (4,76 cm) to the maximum position of 1-5/8” (4,13 cm). These measurements are taken by measuring the length of the spring.

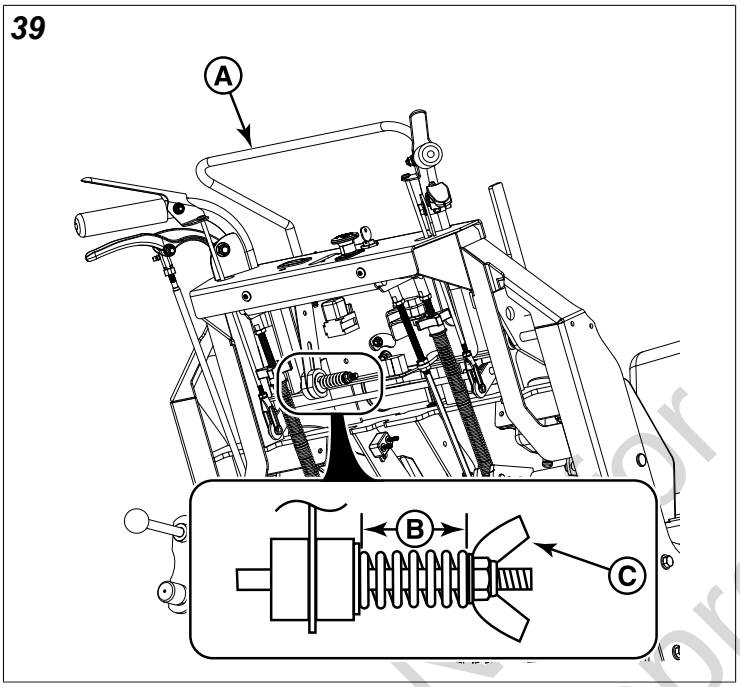

- To **increase** the amount of force necessary to operate the forward speed control lever turn the adjustment nut (C) **clockwise**.
- To **decrease** the amount of force necessary to operate the forward speed control lever turn the adjustment nut **counter-clockwise**.

Deck Lift Rods

The deck lift rods on this unit are fixed and cannot be adjusted.

Mower Deck Leveling Procedure

This unit features and rugged deck lift linkage system that can be easily adjusted to level the mower deck.

Determining if the Mower Deck Needs to be Leveled

1. Park the machine on a flat, level surface. Fully depress the neutral return pedals to return the transmissions to NEUTRAL, disengage the PTO, engage the parking brake, turn the ignition switch to OFF, and remove the ignition key.
2. Verify that the rear tires are inflated to 15 psi (1,03 bar).
3. Verify that the mower blades are flat, and not bent or broken. A bent or broken blade must be replaced.
4. Use the cutting height adjustment handle to lower the mower deck to its lowest cutting position. The deck lift shaft (A, Figure 40) will contact the deck stop (B).

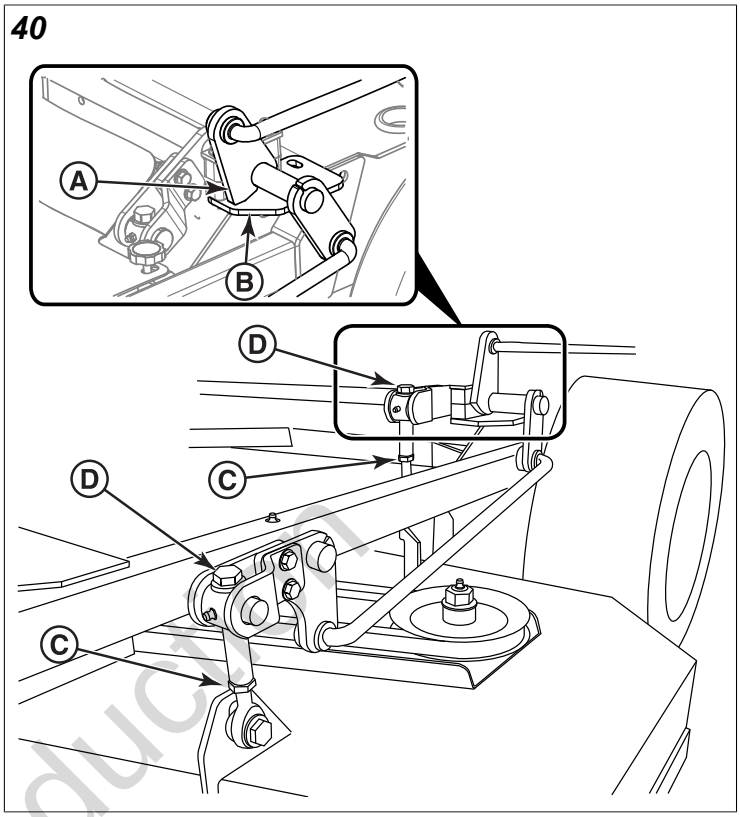

5. Measure from the ground to the bottom edge of the deck at its lowest points as shown in Figure 41.

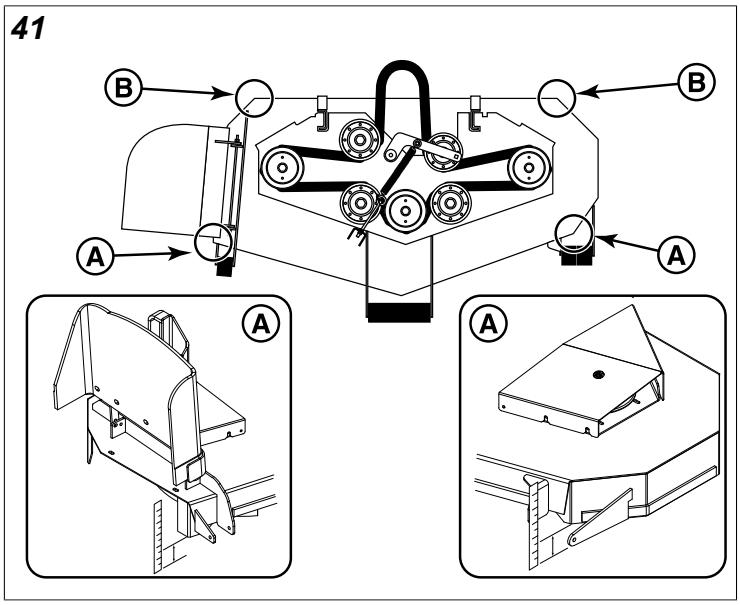

- The front measurements (A, Figure 41) should be 1" (2.54 cm).

Not for Reproduction

- The rear measurements (B) should be 1-1/8" (2.86 cm). If the measurements fall outside of these values, perform the *Deck Leveling Procedure*.

Deck Leveling Procedure

1. Remove the center mower deck guard.
2. Loosen the jam nuts (C, Figure 40) on all four deck linkages.
3. Turn the hex adjusters (D) on the front deck linkages so that the measurements from the bottom edge of the mower deck to the ground equals 1" (2.54 cm).
4. Turn the hex adjusters on the rear deck linkages so that the measurements from the bottom edge of the mower deck to the ground equals 1-1/8" (2.86 cm).
5. Re-check the measurements at all four positions and adjust as necessary until the deck measures correctly.
6. Tighten all four of the jam nuts.
7. Reinstall the center mower deck guard.

Mower Deck Drive Belt Replacement

NOTICE To avoid damaging belts, **do NOT pry belts over pulleys.**

1. Park the unit on a flat level surface such as a concrete floor. Disengage the PTO, engage the parking brake, turn the ignition switch to OFF and remove the key.
2. Lower the mower deck to its lowest cutting position and remove the mower deck guards.

WARNING

Use extreme caution when rotating the idler arm with the breaker bar due to the increased tension in the spring as the idler arm is being rotated. Injury may result if the breaker bar is prematurely released while the spring is under tension.

3. Using a 1/2" breaker bar, place the square end in the square hole located in the end of the idler arm (A, Figure), carefully rotate the breaker bar **counter-clockwise**, which will relieve the tension on the belt exerted from the idler arm.

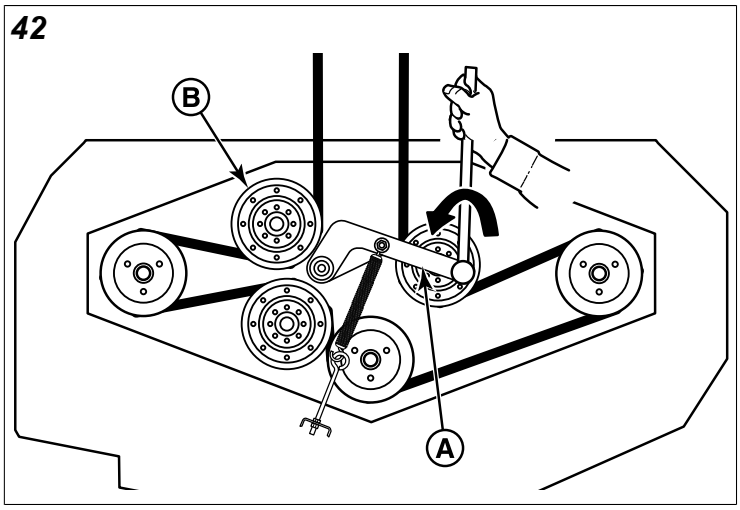

4. Slide the drive belt over the edge of the rear stationary idler pulley (B). Carefully release the tension on the breaker bar.
5. Remove the old belt and replace with a new one. Make sure that the V-side of the belt runs in the pulley grooves.
6. Install the drive belt (A, Figures 43 & 44) on the PTO pulley, the spindle pulleys (B), the front stationary idler pulley(s) (C), and the adjustable idler pulley (D).

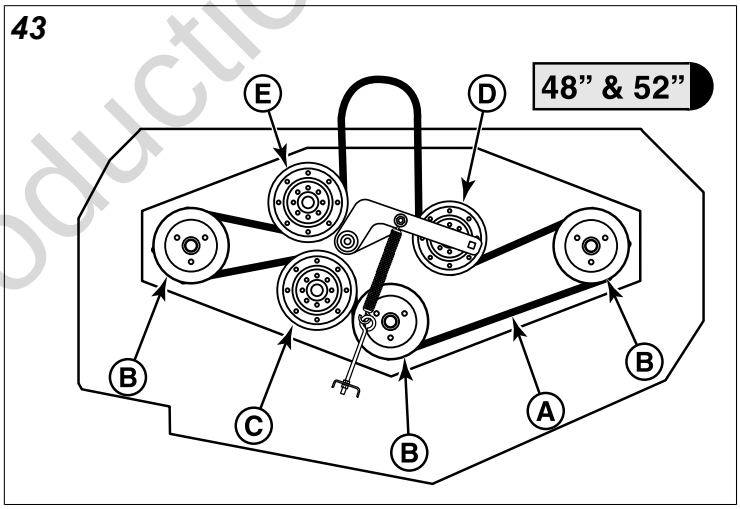

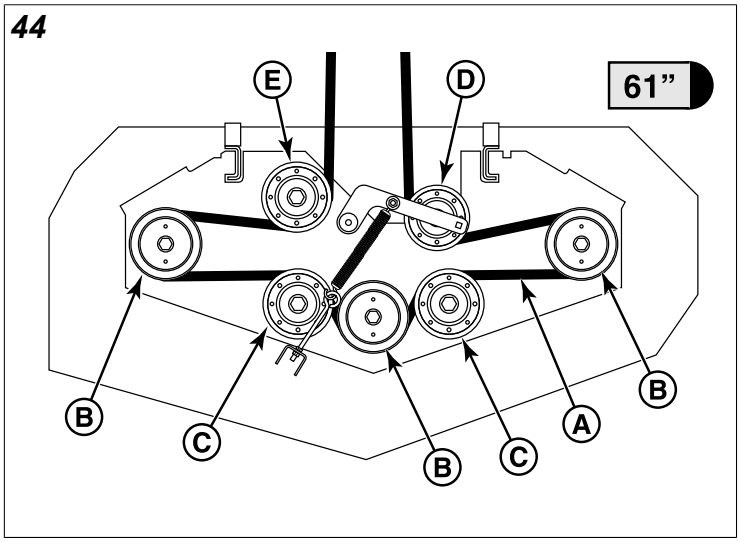

Not for Reproduction

7. Carefully rotate the breaker bar **counter-clockwise** and install the belt on the rear stationary idler pulley (E).
8. Set the mower deck to the 3-1/2" (8,9 cm) cutting position.
9. Use the ***Spring Length*** chart to determine the correct spring length for your unit.

Spring Length	
Deck Size	Measurement
48" Mower Deck	11" (27.9 cm)
52" Mower Deck	11-1/2" (29.2 cm)
61" Mower Deck	11-1/2" (29.2 cm)

10. Measure the coil length (A, Figure 45) of the spring. The measurement should equal the measurement as indicated in the chart. If not, continue with step #11.

45

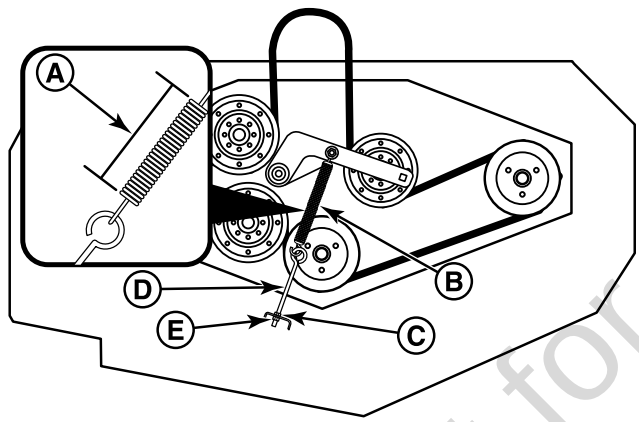

11. Loosen the jam nut (C) on the eye bolt.
12. Turn the adjustment nut (E) until the measurement as indicated in the chart is achieved.
13. Tighten the jam nut.
14. Install the mower deck guards.
15. Run the mower under no-load condition for about five (5) minutes to break in the new belt.

Transaxle Drive Belt Replacement

1. Park the unit on a flat level surface such as a concrete floor. Disengage the PTO, engage the parking brake, turn the ignition switch to OFF, and remove the key.
2. Remove the mower deck drive belt. See *Mower Deck Drive Belt Replacement*.
3. Loosen and remove the hardware (A, Figure 46) that secures both transmission fan guards (B) from the engine deck. Remove the transmission fan guards from the unit.

46

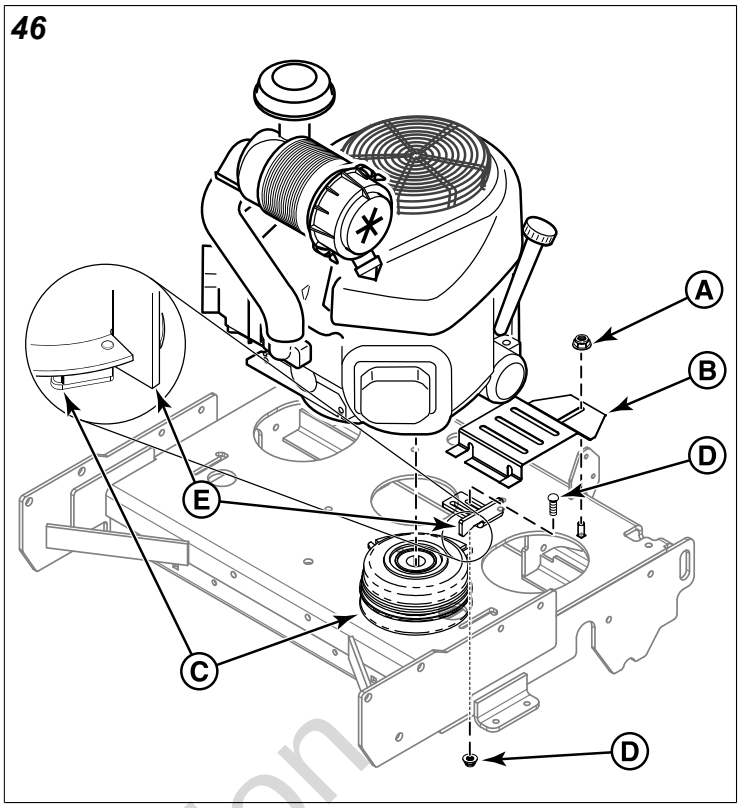

4. Cut the wire tie that secures the PTO clutch wire harness away from the PTO clutch (C).
5. Unplug the PTO clutch wire harness from the PTO clutch.
6. Loosen and remove the hardware (D) that secures the PTO clutch mounting tab (E) to the engine deck. Remove the PTO clutch mounting tab from the engine deck.
7. Loosen the adjustment nut (C, Figure 48) to release the majority of the tension exerted on the belt by the spring (D).

WARNING

Use extreme caution when rotating the idler arm with the breaker bar due to the increased tension in the spring as the idler arm is being rotated. Injury may result if the breaker bar is prematurely released while the spring is under tension.

8. Using a 1/2" breaker bar, place the square end in the square hole located in the end of the idler arm A, Figure 47), carefully rotate the breaker bar **counter-clockwise**, which will relieve the tension on the belt exerted from the idler arm.

Not for Reproduction

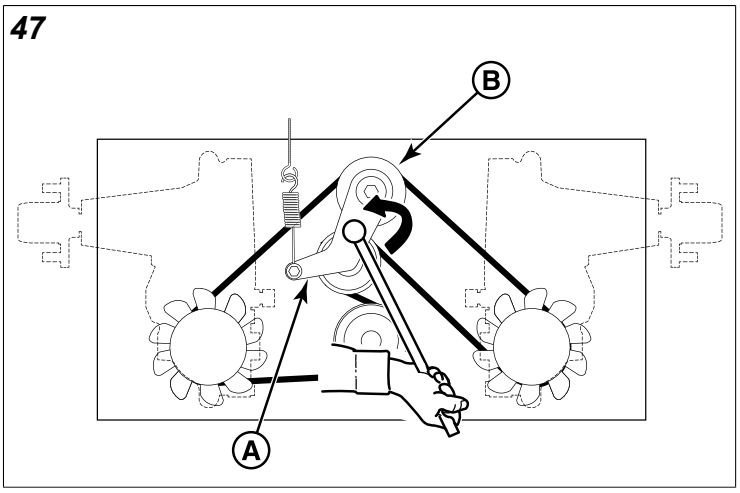

9. Slide the drive belt over the edge of the front stationary pulley (B). Carefully release the tension on the breaker bar.
10. Disconnect the spring (D, Figure 48) from the spring anchor eye bolt (B).

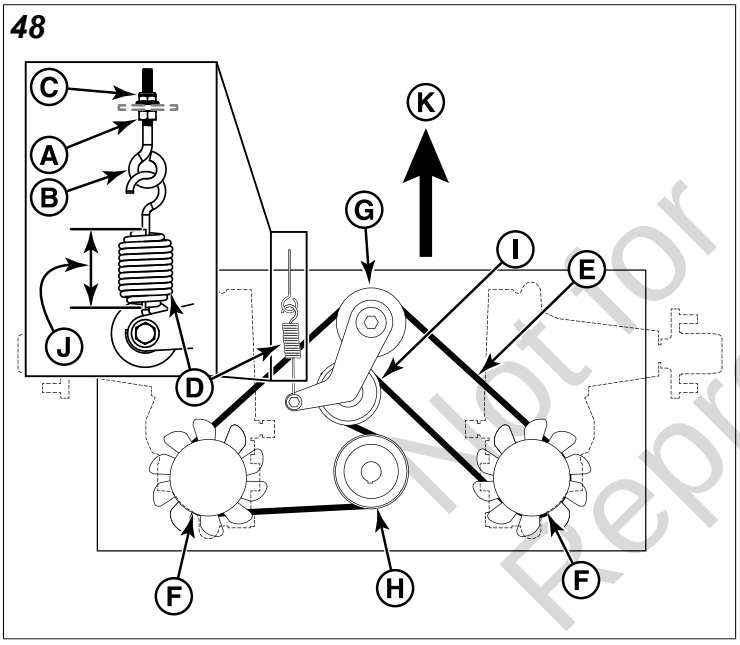

Figures 47 and 48 depict the underside of the engine deck as viewed by looking up towards it. The arrow (K, Figure 48) indicates the front of the machine.

A. Jam Nut
B. Spring Anchor Eyebolt
C. Adjustment Nut
D. Spring
E. Transaxle Drive Belt
F. Transaxle Pulleys
G. Front Stationary Pulley
H. Crankshaft Pulley
I. Adjustable Idler Pulley
J. Coil-to-coil Spring Measurement

11. Remove the old belt (E) and replace with a new one. Make sure that the V-side of the belt runs in the grooves of the transmission pulleys (F), the front stationary pulley (G), and the crankshaft pulley (H). The back side of the belt should contact the face of the flat side adjustable idler pulley (I).
12. Reconnect the spring to the spring anchor eyebolt.
13. Reconnect the spring to the spring anchor eyebolt. Turn the adjustment nut until a coil-to-coil measurement (J) of 3-3/8" ± 1/8" (8.6 cm ± .32 cm) is achieved. Tighten the jam nut.
14. Align the PTO clutch mounting tab with the slot in the PTO clutch and then reinstall the PTO clutch mounting tab to the engine deck and secure using hardware previously removed.
15. Reconnect the PTO clutch wire harness to the PTO clutch.
16. Using a new wire tie, secure the PTO clutch wire harness in the same manner as it was previously installed, ensuring that it cannot contact the moving components.
17. Install the mower deck drive belt. See *Mower Deck Drive Belt Replacement*.

Parking Brake Adjustment

The parking brake mechanism consists of five parking brake rods: the upper brake rod (A, Figure 49), two lower brake rods (B), and two brake linkage rods (C). The upper brake rod connects the parking brake handle to the lower parking brake shaft. The two lower brake rods connect the lower parking brake shaft to the two parking brake pivots. The two brake linkage rods connect the parking brake pivots to the brake arm on the transaxles. Each brake linkage rod is equipped with a compression spring, a set collar, a flat washer, and an adjustment nut. The parking brake is adjusted by changing the position of the adjustment nut and set collar on each brake linkage rod.

Not for Reproduction

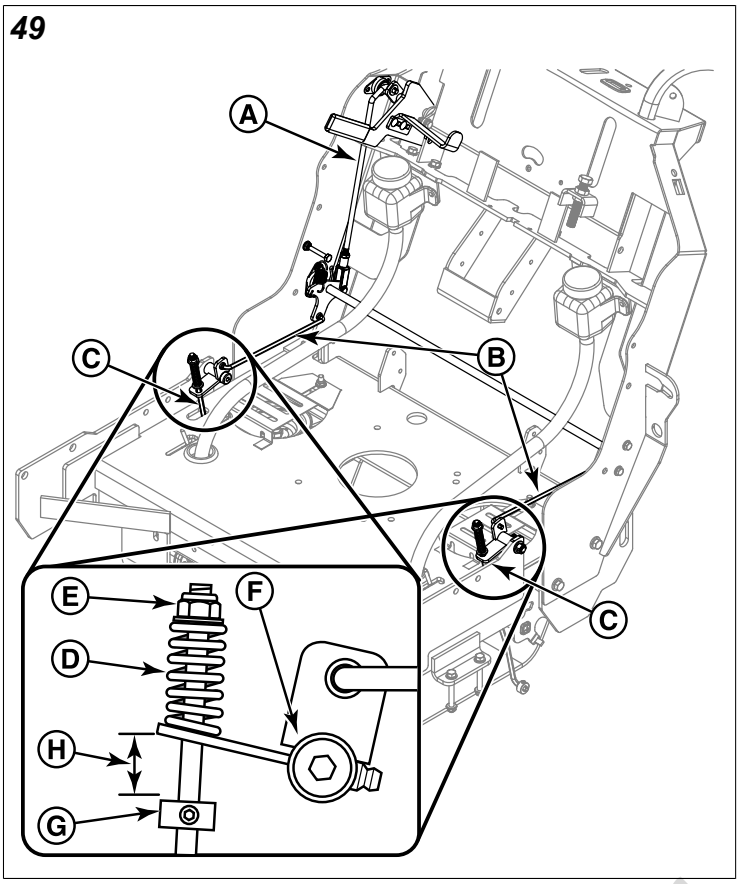

1. Park the unit on a flat, level surface such as a concrete floor. Disengage the PTO, engage the parking brake, turn the ignition switch to OFF, and remove the key.
2. Locate the two (2) parking brake springs (D). The parking brake springs are located on the top side of the engine deck on either side of the engine.
3. The adjustment nuts (E) on the parking brake linkage rods (C) should be positioned so that the threaded end of the linkage rods is just breaking through the nylon on the top of the adjustment nut.
4. Engage the parking brake.
5. Measure the distance between the bottom front edge of the parking brake pivots (F) and the top of the set collars (G). The measurement (H) should be 7/16" (1.1 cm). If not, position the set collars until the measurement equals 7/16" (1.1 cm).

Cleaning the Battery and Cables

This unit is equipped with a maintenance-free BCIU1 battery.

WARNING

Keep open flames and sparks away from the battery.

- Be careful when handling the battery.
- Avoid spilling electrolyte.
- Keep flames and sparks away from the battery.
- When removing or installing battery cables, disconnect the negative cable FIRST and reconnect it LAST. If not done in this order, the positive terminal can be shorted to the frame by a tool.

1. Remove the strap and battery box cover.
2. Disconnect the cables from the battery, negative [-] cable first (A, Figure 50).

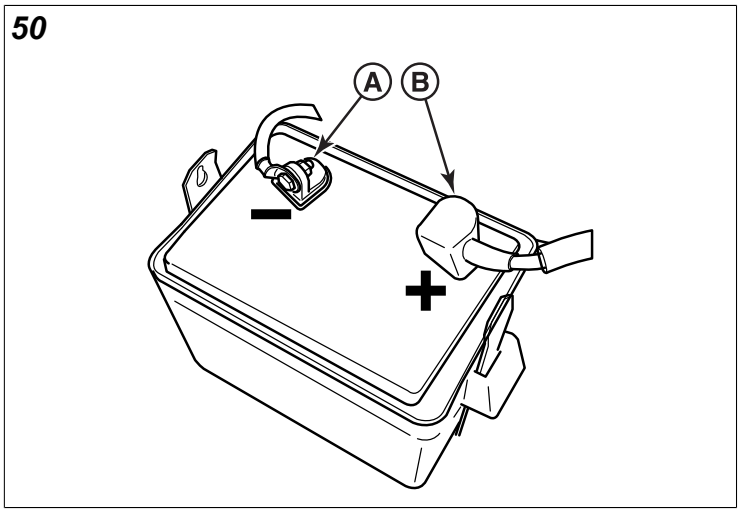

3. Clean the battery terminals and cable ends with a wire brush until shiny.
4. Reinstall the battery and reattach the battery cables, positive [+] cable first (B).
5. Coat the cable ends and the battery terminals with petroleum jelly or non-conducting grease.
6. Reinstall the battery box cover and strap.

Battery Service

WARNING

Keep open flames and sparks away from the battery; the gasses coming from it are highly explosive. Ventilate the battery well during charging.

Checking Battery Voltage

A voltmeter can be used to determine condition of the battery. When the engine is off, the voltmeter shows battery voltage, which should be 12 volts. When the engine is running, the voltmeter shows voltage of charging circuit which normally is 13 to 14 volts.

A dead battery, or one too weak to start the engine, may not mean the battery needs to be replaced. For example, it may mean that the alternator is not charging the battery properly. If there is any doubt about the cause of the problem, see your authorized Ferris servicing dealer. If you need to replace the battery, follow the steps under *Cleaning the Battery and Cables*.

Charging a Completely Discharged Battery

WARNING

- Do NOT charge battery with key switch ON.
- Never use a quick battery charger to start engine.
- Always disconnect negative (-) battery cable before charging battery,

Not for Reproduction

1. Be aware of all the safety precautions you should observe during the charging operation. If you are unfamiliar with the use of a battery charger and hydrometer, have the battery serviced by your dealer.
2. Add distilled water sufficient to cover the plate (fill to the proper level near the end of the charge). If the battery is extremely cold, allow it to warm before adding water because the water level will rise as it warms. Also, an extremely cold battery will not accept a normal charge until it becomes warm.
3. Always unplug or turn the charger off before attaching or removing the clamp connections.
4. Carefully attach the clamps to the battery in proper polarity (usually red to [+] positive and black to [-] negative).
5. While charging, periodically measure the temperature of the electrolyte. If the temperature exceeds 125° F (51.6° C), or if violent gassing or spewing of electrolyte occurs, the charging rate must be reduced or temporarily halted to prevent battery damage.
6. Charge the battery until fully charged (until the specific gravity of the electrolyte is 1.250 or higher and the electrolyte temperature is at least 60° F). The best method of making certain a battery is fully charged, but not over charged, is to measure the specific gravity of a cell once per hour. The battery is fully charged when the cells are gassing freely at low charging rate and less than 0.003 change in specific gravity occurs over a three hour period.

Jump Starting With Auxiliary (Booster) Battery

Jump starting is not recommended. However, if it must be done, follow these directions. Both booster and dis-charged batteries should be treated carefully when using jumper cables. Follow the steps below EXACTLY, being careful not to cause sparks. Refer to Figure 51.

WARNING

For your personal safety, use extreme care when jump starting. Never expose battery to open flame or electric spark – battery action generates hydrogen gas which is flammable and explosive. Do not allow battery acid to contact skin, eyes, fabrics, or painted surfaces. Batteries contain a sulfuric acid solution which can cause serious personal injury or property damage.

To avoid engine damage, do not disconnect battery while engine is running. Be sure terminal connections are tight before starting.

51

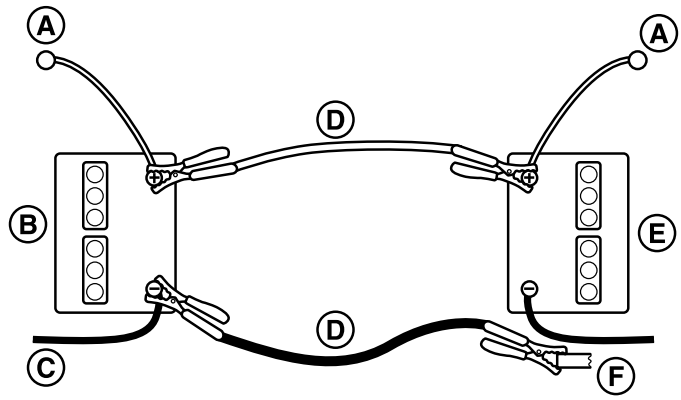

This hook-up is for negative grounded vehicles.	
Callout	**Description**
A	To Starter Switch
B	Starting Vehicle Battery
C	To Ground
D	Jumper Cable
E	Discharged Vehicle Battery
F	Engine Block
Make sure vehicles do not touch.	

1. Both batteries must be of the same voltage.
2. Position the vehicle with the booster battery adjacent to the vehicle with the discharged battery so that booster cables can be connected easily to the batteries in both vehicles. Make certain vehicles do not touch each other.
3. Wear safety glasses and shield eyes and face from batteries at all times. Be sure vent caps are tight. Place damp cloth over vent caps on both batteries.
4. Connect positive (+) cable to positive post of discharged battery (wired to starter or solenoid).
5. Connect the other end of same cable to same post marked positive (+) on booster battery.
6. Connect the second cable negative (-) to other post of booster battery.
7. Make final connection on engine block of stalled vehicle away from battery. Do not lean over batteries.
8. Start the engine of the vehicle with the booster battery. Wait a few minutes, then attempt to start the engine of the vehicle with the discharged battery.
9. If the vehicle does not start after cranking for ten (10) seconds, STOP PROCEDURE. More than ten (10) seconds seldom starts the engine unless some mechanical adjustment is made. Allow a sixty (60) second cool down period between starting attempts. Failure to follow these guidelines can burn out starter motor.
10. After starting, allow the engine to return to idle speed. Remove the cable connection at the engine or frame. Then remove the other end of the same cable from the booster battery.

Not for Reproduction

11. Remove the other cable by disconnecting at the discharged battery first and then disconnect the opposite end from the booster battery.
12. Discard the damp cloths that were placed over the battery vent caps.

WARNING

Any procedure other than the preceding could result in:

(a) personal injury caused by electrolyte squirting out the battery vents,

(b) personal injury or property damage due to battery explosion,

(c) damage to the charging system of the booster vehicle or of the immobilized vehicle.

Do not attempt to jump start a vehicle having a frozen battery because the battery may rupture or explode. If a frozen battery is suspected, examine all fill vents on the battery. If ice can be seen or if the electrolyte fluid cannot be seen, do not attempt to start with jumper cables as long as the battery remains frozen.

Troubleshooting

While normal care and regular maintenance will extend the life of your equipment, prolonged or constant use may eventually require that service be performed to allow it to continue to operating properly.

This troubleshooting guide lists the most common problems, their causes and remedies.

Refer to *Regular Maintenance* for instructions on how to perform most of these minor adjustments and service repairs yourself. If you prefer, all of these procedures can be performed for you by your local authorized dealer.

WARNING

Remove ignition key prior to performing maintenance on the unit.
To avoid serious injury, perform maintenance on the unit or mower deck only when the engine is stopped and the parking brake is engaged.

Always remove the ignition key, disconnect the spark plug wire(s) and fasten it away from the plug(s) before beginning the maintenance, to prevent accidental starting of the engine.

Troubleshooting Charts

Troubleshooting the Unit

Problem: Engine will not turnover or start.	
Cause	**Remedy**
Forward speed control lever is not in the neutral position.	Depress the neutral return pedals fully to return the unit to neutral.
Out of fuel.	If engine is hot, allow it to cool, then refill the fuel tank.
Engine flooded.	**Carbureted Models:** Move choke control to the closed position. **Fuel Injected Models:** See authorized service dealer.
Fuse blown.	Replace fuse.
Wiring loose or broken.	Visually check wiring & replace broken or frayed wires. Tighten loose connections.
Safety interlock switch faulty.	Replace as needed. See authorized service dealer.
Spark plug(s) faulty, fouled or incorrectly gapped.	Clean and gap or replace. See engine manual.
Water in fuel.	Drain fuel and replace with fresh fuel.
Gas is old or stale.	Drain fuel and replace with fresh fuel.
Fuel Injected Models Only: Malfunction in fuel injection system.	See authorized service dealer.

Problem: Engine starts hard or runs poorly.	
Cause	**Remedy**
Fuel mixture is too rich.	1.) Clean air filter. 2.) **Carbureted Models:** Check choke adjustment. **Fuel Injected Models:** See authorized service dealer.
Spark plug faulty, fouled, or incorrectly gapped.	Clean and gap or replace. See engine manual.

Problem: Engine knocks.	
Cause	*Remedy*
Low oil level.	Check / Add oil as required.
Using wrong grade oil.	See engine manual.

Problem: Excessive oil consumption.	
Cause	**Remedy**
Engine running too hot.	Clean engine fins, blower screen, and air cleaner.
Using wrong weight oil.	See engine manual.
Too much oil in crankcase.	Drain excess oil.

Problem: Engine exhaust is black.	
Cause	**Remedy**
Dirty air filter.	Replace air filter. See engine manual.
Engine choke control is in closed position.	Open choke control.

Problem: Malfunction Indicator Lamp (M.I.L.) is flashing (Fuel Injected Models Only).	
Cause	**Remedy**
Problem with the fuel injection system.	See authorized service dealer.

Problem: Engine runs but mower will not engage.	
Cause	**Remedy**
Transmission release lever(s) in "disengaged" position.	Move transmission release lever(s) to the "engaged" position.
Mower drive belt is broken.	See "Transmission Drive Belt Replacement".
Mower drive belt is slipping.	See problem and cause below.

Not for Reproduction

Problem: Engine runs but mower will not engage.	
Brake is not fully released.	See authorized service dealer.

Problem: Mower drive belt slips.	
Cause	**Remedy**
Pulleys or belt is greasy or oily.	Clean as required.
Tension is too loose.	Adjust spring tension. See "Transmission Drive Belt Replacement".
Belt stretched or worn.	Replace belt.

Problem: Parking brake will not hold.	
Cause	**Remedy**
Brake is incorrectly adjusted.	See "Parking Brake Adjustment".

Problem: Mower steers or handles poorly.	
Cause	**Remedy**
Steering linkage is loose.	Check and tighten any loose connections.
Improper tire inflation.	See "Specifications" for proper tire inflation and adjust tire pressures accordingly.
Tracking needs adjustment.	See "Neutral and Tracking Adjustment".

Troubleshooting the Mower Deck

Problem: Mower deck will not raise.	
Cause	**Remedy**
Lift Linkage not properly attached or damaged.	See authorized service dealer for repair.

Problem: Engine stalls easily with mower deck engaged.	
Cause	**Remedy**
Engine speed too slow.	Set to full throttle.
Ground speed to fast.	Decrease ground speed.
Cutting height set too low.	Cut tall grass at maximum cutting height during first pass, and then at the desired cutting height for the second pass.
Discharge chute jamming with cut grass.	Cut grass with discharge pointing towards previously cut area.

Problem: Excessive mower deck vibration.	
Cause	**Remedy**
Blade mounting bolts are loose.	Tighten to 120 ft. lbs. (163 N.m.).
Mower blades, arbors, or pulleys are bent.	Check and replace as necessary.
Mower blades are out of balance.	Remove, sharpen, and balance blades. See "Servicing the Mower Blades".
Belt installed correctly.	Reinstall the belt correctly. See "Mower Deck Drive Belt Replacement".

Problem: Excessive belt wear or breakage.	
Cause	**Remedy**
Bent or rough pulleys.	Repair or replace.
Using incorrect belt.	Replace with correct belt.

Problem: Mower deck drive belt slips or fails to drive.	
Cause	**Remedy**
Idler pulley spring broken or not properly attached.	Repair or replace as needed.
Mower drive belt is broken.	Replace mower drive belt.

Problem: Mower (blades) does not engage.	
Cause	**Remedy**
Electrical wiring damage.	Locate and repair damaged wire.
Operator is not depressing the operator presence handles.	Operator depresses the operator presence handles and the pulls up on the PTO (Power Take Off) switch.

Troubleshooting Common Cutting Problems

Problem: Streaking	
Streaking is when thin strips of uncut grass are left behind the mower. Streaking is usually caused by operator error or poor blade maintenance.	
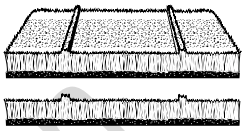	
Cause	**Remedy**
Blades are not sharp.	Sharpen your blades.
Blades are worn down too far.	Replace your blades.
Engine speed is too slow.	Always mow at full throttle.
Ground speed is too fast.	Slow down.
Deck is plugged with grass.	Clean out the mower.
Not overlapping cutting rows enough.	Overlap your cutting rows
Not overlapping enough when turning.	When turning your effective cutting width decreases–overlap more when turning.

Problem: Scalping	
Scalping is when the mower deck comes close to or hits the ground. Scalping can be caused by the mower deck misadjustment, unevenness in the lawn, or by mower deck bouncing because the ground speed is too fast.	
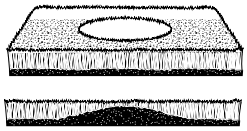	
Cause	**Remedy**
Lawn is uneven or bumpy.	Roll or level the lawn.
Mower deck cutting height is set too low.	Raise the cutting height.
Ground speed is too fast.	Slow down.
Deck is not leveled correctly.	Correctly level the deck.
Tire pressure is low or uneven.	Check and inflate the tires.

Problem: Stepped Cutting
Stepped cutting is sharp ridges or uneven levels left in the lawn surface. Stepped cutting is usually caused by mower deck damage or misadjustment, or damage to the mower blades.

Not for Reproduction

Problem: Stepped Cutting	
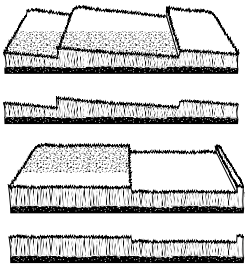	
Cause	**Remedy**
Deck is not leveled correctly.	Level the deck correctly.
Tires are not properly inflated.	Check and inflate the tires.
Blades are damaged.	Replace the blades.
Deck shell is damaged.	Repair or replace the deck.
Mower spindle is bent or loose.	Repair or replace the spindle.
Blades are installed incorrectly.	Reinstall the blades correctly.

Problem: Uneven Cutting	
Uneven cutting is waviness or smooth troughs in the lawn surface. Uneven cutting is usually caused by mower deck damage or misadjustment.	
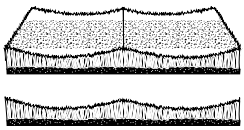	
Cause	**Remedy**
Deck is not leveled correctly.	Level the deck correctly.
Blades are dull or worn.	Sharpen or replace the blades.
Blades are damaged.	Replace the blades.
Deck is clogged with grass clippings.	Clean out the deck.
Deck shell is damaged.	Repair or replace the deck.
Mower spindle is bent or loose.	Repair or replace the spindle.
Blades are installed incorrectly.	Reinstall the blades correctly.
Tires are not properly inflated.	Check and inflate the tires.

Problem: Stringers	
Stringers are sparse patches of uncut grass left behind the mower. Stringers are usually caused by operator error or poor blade maintenance.	
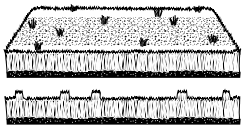	
Cause	**Remedy**
Blades are not sharp or nicked.	Sharpen your blades.
Blades are worn down too far.	Replace your blades.
Engine speed is too slow.	Always mow at full throttle.
Ground speed is too fast.	Slow down.
Deck is plugged with grass.	Clean out the mower.

Specifications

Specifications are correct at time of printing and are subject to change without notice.

ENGINE

For complete engine specifications see the engine manufacturer's operator's manual included with your unit.

Fits models: 5901882, 5901965, 5901966, 5901891, 5902014 & 5902015

Kawasaki FX651V	
Make	Kawasaki
Model	FX651V-DS00-S
Electrical System	12 volt, 15 amp charging coil, Battery: 340 cca

Fits models: 5901968 & 5902016

Kawasaki FX730V	
Make	Kawasaki
Model	FX730V-DS00-S
Electrical System	12 volt, 15 amp charging coil, Battery: 340 cca

Fits models: 5901883, 5901884, 5901885, 5901892, 5901893 & 5901969

Briggs & Stratton Vanguard EFI	
Make	Briggs & Stratton
Model	49E877-0008-G1
Electrical System	12 volt, 20 amp alternator, Battery: 340 cca

CHASSIS

Fuel Tank Capacity	5 gallons (18,73 L)
Rear Wheels	
Tire Size	20 X 8 - 10
Inflation Pressure	15 psi (1,03 bar)
Front Wheels	
Tire Size	9 X 3.5 - 4
Inflation Pressure	N/A (Flat Free Tire)

TRANSMISSIONS

LH	Z9-YMFE-SL5B-1UXX (5108693)
RH	Z9-WMFE-SL5C-1UXX (5108694)
Type	ZT-3400
Hydraulic Fluid	SAE 20W-50 motor oil
Speeds	
Forward	0-7 MPH (0-11,27 km/h)
Reverse	0-3 MPG (0-4,83 km/h)

DIMENSIONS

Units with 48" Mower Decks

Overall Length	78-3/4" (200 cm)
Overall Width (discharge chute up)	49-1/2" (125 cm)
Overall Width (discharge chute down)	62-1/2" (159 cm)
Height	41-1/2" (105 cm)

Not for Reproduction

Weight	809 lbs (367 kg)

Units with 52" Mower Decks

Overall Length	78-3/4" (200 cm)
Overall Width (discharge chute up)	57" (145 cm)
Overall Width (discharge chute down)	67" (170 cm)
Height	41-1/2" (105 cm)
Weight (approximate)	814 lbs (369 kg)

Units with 61" Mower Decks

Overall Length	81-1/2" (205 cm)
Overall Width (discharge chute up)	65" (165 cm)
Overall Width (discharge chute down)	76-1/2" (194 cm)
Height	41-1/2" (105 cm)
Weight (approximate)	888 lbs (403 kg)

Not for Reproduction

Warranty

If your unit is equipped with a dual function hour meter that displays both engine hours and PTO hours, the warranty is based on the engine hours as displayed by the hour meter.

Warranty Statement

BRIGGS & STRATTON WARRANTY POLICY (January 2014)

LIMITED WARRANTY

Briggs & Stratton warrants that, during the warranty period specified below, it will repair or replace, free of charge, any part that is defective in material or workmanship or both. Transportation charges on product submitted for repair or replacement under this warranty must be borne by purchaser. This warranty is effective for and is subject to the time periods and conditions stated below. For warranty service, find the nearest Authorized Service Dealer in our dealer locator map at ferrismowers.com.The purchaser must contact the Authorized Service Dealer, and then make the product available to the Authorized Service Dealer for inspection and testing.

There is no other express warranty. Implied warranties, including those of merchantability and fitness for a particular purpose, are limited to the warranty period listed below, or to the extent permitted by law . Liability for incidental or consequential damages are excluded to the extent exclusion is permitted by law. Some states or countries do not allow limitations on how long an implied warranty lasts, and some states or countries do not allow the exclusion or limitation of incidental or consequential damages, so the above limitation and exclusion may not apply to you. This warranty gives you specific legal rights and you may also have other rights which vary from state to state or country to country.**

WARRANTY PERIOD		
Covered Parts	**Standard Warranty Period**	**Rental Warranty Period**
Riding mowers - except as noted below +	4 years (48 months) or 500 hours, whichever occurs first. Unlimited hours during the first 2 years (24 months)	90 days
Walk mowers - except as noted below + (over 30 inches of cutting width)	2 years (24 months) unlimited hours	90 days
+Hydro Drive Belt, Gearbox Drive Belt, Tires, Brake Pads, Hoses, Battery, Blades	90 days	90 days
+Mower Deck Drive Belt (Conventional Single Belt Deck Drive Systems)	1 year (12 months) or 100 hours, whichever occurs first	90 days
+Mower Deck Drive Belts (Two Belt Deck Drive Systems)	3 years (36 months) or 300 hours, whichever occurs first. (Parts and labor in year one; parts only in years two and three.)	90 days
+Attachments	1 year	90 days
+Engine*	See Engine Operator's Manual	See Engine Operator's Manual

* Emissions-related components are covered by the Emissions Warranty Statement

** In Australia, the following applies, notwithstanding any other provision: Our goods come with guarantees that cannot be excluded under the Australian Consumer Law. You are entitled to a replacement or refund for a major failure and compensation for any other reasonably foreseeable loss or damage. You are also entitled to have the goods repaired or replaced if the goods fail to be of acceptable quality and the failure does not amount to a major failure. Unless required under Australian Consumer Law, Ferris shall not be liable under this Warranty to the Customer or any other person in connection with this Warranty, for consequential, direct or indirect damages, loss or costs incurred or suffered by the Customer or any other person; or any damage to property, loss of turnover, loss of profits, loss of business or loss of goodwill, arising out of the failure of any product to operate properly. For warranty service, find the nearest Authorized Service Dealer in our dealer locator map at ferrismowers.com (Select region: Australia), or by calling 1300 274 447, or by emailing or writing to salesenquiries@briggsandstratton.com.au, Briggs & Stratton Australia Pty Ltd, 3 Imperata Pl, Kemps Creek, NSW, Australia, 2178.

The warranty period begins on the date of purchase by the first retail or commercial customer.

Not for Reproduction

To ensure prompt and complete warranty coverage, register your product at the website shown above or at www.onlineproductregistration.com, or mail the completed registration card (if provided), or call 1-800-743-4115 (in USA).

Save your proof of purchase receipt. If you do not provide proof of the initial purchase date at the time warranty service is requested, the manufacturing date of the product will be used to determine the warranty period. Product registration is not required to obtain warranty service on Briggs & Stratton products.

ABOUT YOUR WARRANTY

Warranty service is available only through *Ferris* Authorized Service Dealers. This warranty only covers defects in materials or workmanship. It does not cover damage caused by improper use or abuse, improper maintenance or repair, normal wear and tear, or stale or unapproved fuel.

Improper Use and Abuse - The proper, intended use of this product is described in the Operator's Manual. Using the product in a way not described in the Operator's Manual or using the product after it has been damaged will not be covered under this warranty. Warranty coverage will also not be provided if the serial number on the product has been removed or the product has been altered or modified in any way, or if the product has evidence of abuse such as impact damage, or water/chemical corrosion damage.

Improper Maintenance or Repair - This product must be maintained according to the procedures and schedules provided in the Operator's Manual, and serviced or repaired using genuine Briggs & Stratton parts or equivalent. Damage caused by lack of maintenance or use of non-original or non-equivalent parts is not covered by warranty.

Normal Wear and Tear - Like all mechanical devices, the unit is subject to wear even when properly maintained. This warranty does not cover replacement or repairs when normal use has exhausted the life of a part or the equipment. Except as noted in the warranty period, maintenance and wear items such as filters, belts, cutting blades, and brake pads (except engine brake pads) are not covered by warranty due to wear characteristics alone, unless the cause is due to defects in material or workmanship.

Stale or Unapproved Fuel - In order to function correctly, this product requires fresh fuel that conforms to the criteria specified in the Operator's Manual. Engine or equipment damage caused by stale fuel or the use of unapproved fuels (such as E15 or E85 ethanol blends) is not covered by warranty.

Other Exclusions - This warranty excludes damage due to accident, abuse, modifications, alterations, improper servicing, freezing or chemical deterioration. Attachments or accessories that were not originally packaged with the product are also excluded. This warranty does not include used, reconditioned, second-hand, or demonstration equipment or engines. This warranty also excludes failures due to acts of God and other force majeure events beyond the manufacturer's control.

Evaporative Emissions Warranty

For details on the Evaporative Emissions Control System Warranty, contact your Ferris Authorized Service Dealer to start Evaporative Emissions Warranty service or refer to the Evaporative Emissions Control System Warranty statement located at ferrismowers.com. The warranty can be located by typing “Emissions Warranty” in the FAQ or by calling 1-800-444-7774. For Exhaust Emissions Control System Warranty related to the engine refer to the engine operator’s manual.

Not for Reproduction

FERRIS®