OPERATOR'S MANUAL & PARTS LIST

AERA-VATOR MODEL 440 AND 660

THE GRASSHOPPER COMPANY
Moundridge, Kansas 67107 U.S.A.
Phone (316) 345-8621
Fax (316) 345-2301

Rev. 9-97
Form 172330
Printed in U.S.A.

INTRODUCTION

Congratulations on your selection of Grasshopper equipment. We believe you have exercised excellent judgment in the purchase of Grasshopper equipment. We are most appreciative of your patronage.

We recommend that you carefully read this entire manual before operating the unit. Time spent becoming fully acquainted with its performance features, adjustments and maintenance will add a longer and more satisfactory life to your Grasshopper.

The Grasshopper equipment you have purchased has been carefully engineered and manufactured to provide dependable and satisfactory use. Like all mechanical products it will require cleaning and upkeep. Lubricate it as specified in the manual. Observe all safety information in this manual and all safety decals on the tractor and attachments.

The illustrations and data used in this manual were current at the time of printing, but due to possible in-line production changes your machine may vary slightly in detail. The manufacturer reserves the right to make changes or add improvements to its products at any time without incurring any obligation to make such changes to products manufactured previously.

As with all lawn and grounds equipment, if handled carelessly this machine is a dangerous piece of equipment. **If used incorrectly this machine can cause severe injury.** You, the operator, are responsible when operating it. Therefore, safety is of the utmost importance.

ATTENTION:

- **Read the instructions and warnings carefully before using this machine.**
- **Read your Grasshopper warranty, enclosed with the tractor manual. To validate warranty, fill in the required information and return the warranty form within 10 days of purchase to:**

  THE GRASSHOPPER CO.
  P.O. Box 637
  Moundridge, Kansas 67107

Use only genuine Grasshopper service parts. Substitute parts will void the warranty and may not meet standards required for safe and satisfactory operation. Record serial number of your Aera-vator.

SERIAL NUMBER: _____

(Serial tag is located just below the top, on the upper right center of the housing.)

Provide this information to your dealer to obtain correct repair parts.

Copyright © 1997, 1996 and 1995 by The Grasshopper Company.
All rights reserved.

TABLE OF CONTENTS

PAGE

SAFETY SYMBOLS 4

SAFETY DECALS 5

SAFETY INFORMATION
- Training 6
- Preparation 6
- Operational Safety 6-7
- Maintenance Safety 7
- Storing Safely 7

GENERAL INFORMATION 8

OPERATION AND MAINTENANCE
- 440 Electric Lift Wiring Harness Installation 9
- 440 and 660 Hydraulic Lift Wiring Harness Installation 10
- 440 Aera-vator Assembly Installation 11
- 660 Aera-vator Assembly Installation 11-12
- Maintenance of Aera-vator 12
- Aera-vator Weight 12
- Counterweight 12

PARTS LIST AND ILLUSTRATION
- 440 Aera-vator Assembly 13
- 440 Aera-vator Electric Lift Assembly 14
- 440 Aera-vator Hydraulic Lift Assembly 15
- 660 Aera-vator Assembly 16-17
- 440 Rotor Assembly 18-19
- 660 Rotor Assembly 20-21
- 440 Wiring Assembly 22-23
- Aera-vator Weight Kit 24

SAFETY SYMBOLS

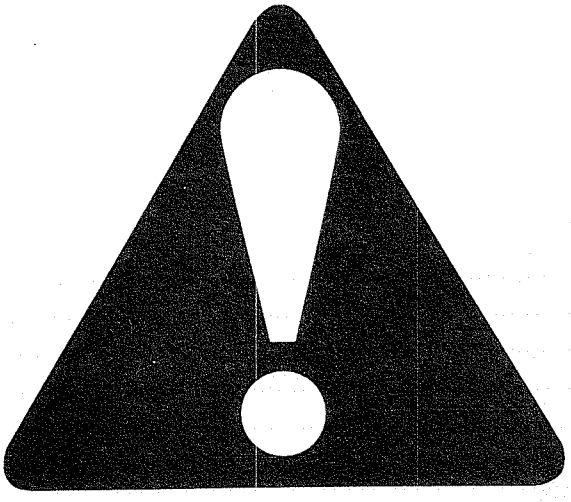

This Safety Alert Symbol means **ATTENTION! BECOME ALERT! YOUR SAFETY IS INVOLVED!**

Throughout this manual, the term **IMPORTANT** is used to indicate that failure to observe can cause damage to equipment. The terms **CAUTION, WARNING** and **DANGER** are used in conjunction with the Safety Alert Symbol (a triangle with an exclamation mark) to indicate the degree of hazard for items of personal safety.

⚠ CAUTION

Is used for general reminders of good safety practices or to direct attention to unsafe practices.

⚠ WARNING

Denotes a specific potential hazard.

⚠ DANGER

Denotes the most serious specific potential hazard.

SAFETY DECALS

Replace Immediately If Damaged

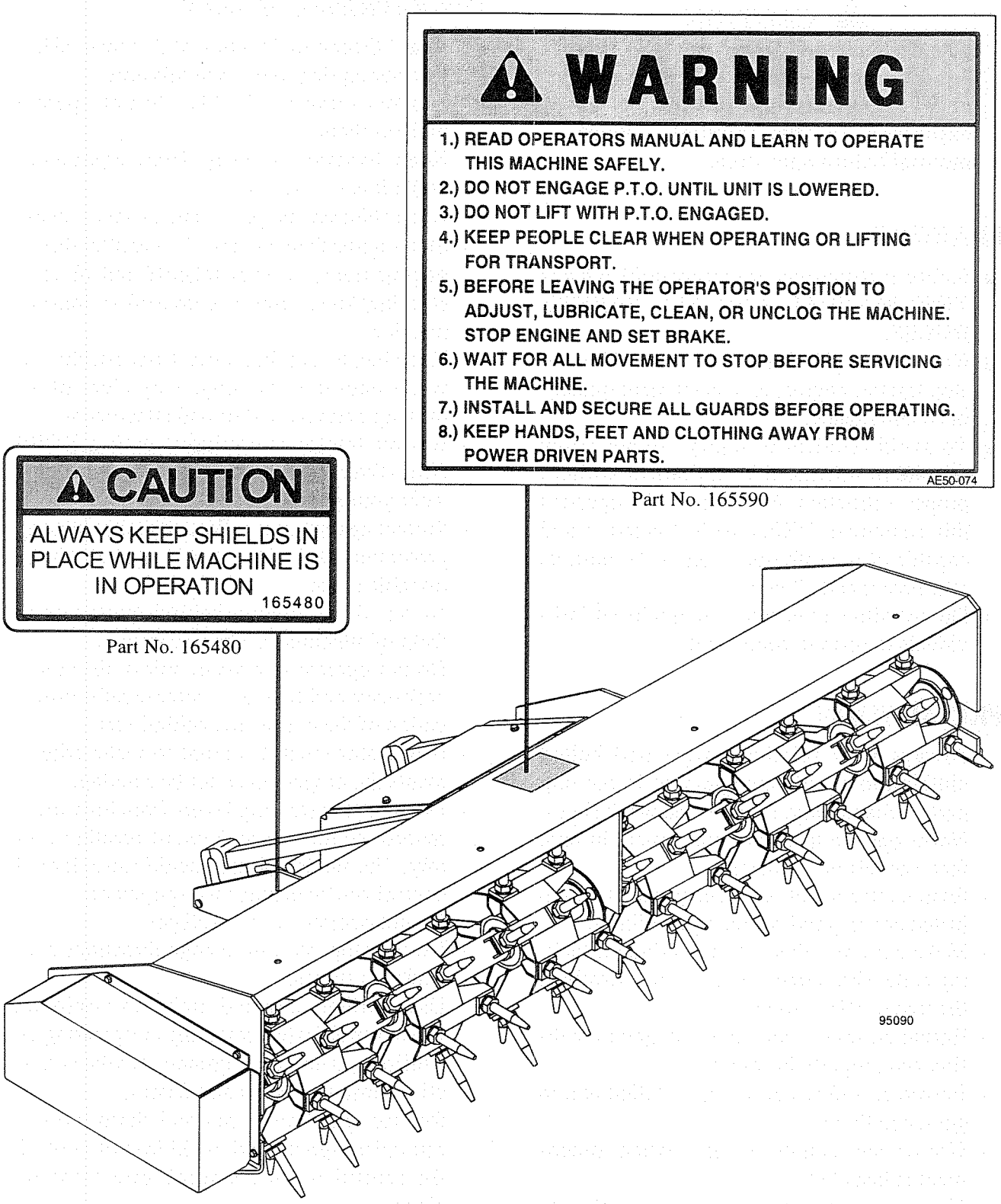

Fig. 1

WORK SAFELY - FOLLOW THESE RULES

⚠ CAUTION

The designed and tested safety of this equipment depends on it being operated within the limitations as explained in this manual. Read manual before operating.

TRAINING

- Safety instructions are important! **READ THIS MANUAL AND ALL SAFETY RULES.**
- Know your equipment's controls and how to stop tractor, engine, and attachment quickly in an emergency.
- To avoid accident or injury, do not allow anyone to operate this equipment without proper instruction. Any person who operates this equipment **MUST** be instructed in and capable of the safe operation of the unit, its attachment and all controls.
- Do not allow children or unqualified individuals to operate equipment.

PREPARATION

- Always wear relatively tight and belted clothing to avoid entanglement in moving parts. Wear sturdy, rough soled work shoes. Never operate tractor or attachment in bare feet, sandals or sneakers.
- Ensure attachment is properly mounted, adjusted and in good operating condition.
- Make sure driveline spring-activated locking collar slides freely and is seated firmly in the tractor PTO groove.
- Ensure all safety shielding is in good condition and properly installed.
- Ensure all safety decals are installed and in good condition.
- Use correct counterweights when attachment is installed.
- Never permit any person, other than the operator, to ride or board the tractor or attachment at any time.
- Operate only in daylight or good artificial light.

OPERATIONAL SAFETY

- Read "Operation" section of this manual before attempting to operate this unit.
- Fenders serve as shields. Do not operate without them.
- Keep bystanders away from equipment while it is in operation.
- Keep children and pets a safe distance away.
- Start engine from operator's seat after disengaging tractor power takeoff and placing steering levers into the neutral swing-out position.
- Keep hands and feet away from attachment while engine is running. Stay clear of all moving parts on tractor and attachment.
- If your tractor is equipped with a ROPS (Roll-Over Protective Structure), you must wear your seat belt.
- Protect against noise. Wear suitable hearing protection devices to protect against objectionable noise.
- Never allow anyone behind tractor or in front of attachment when operating.
- Do not operate in reverse unless absolutely necessary and then only after careful observation of the entire area behind you.
- If operator must dismount to make adjustments the engine must not be running.
- Do not move steering levers from forward to reverse or reverse to forward position rapidly. The sudden change could cause loss of control and/or damage to equipment.
- Do not operate on steep slopes.
- Do not stop, start or change directions suddenly on slopes.
- Use extreme care and maintain minimum ground speed when traveling or operating on a hillside, over rough ground, or when operating close to ditches and fences.
- Reduce speed on slopes and sharp turns to minimize tipping and avoid loss of control. Be careful when changing directions on slopes.
- Stay alert for holes, rocks, roots, and other hidden hazards in the terrain. Keep away from drop-offs.
- Stop attachment and tractor immediately

upon striking an obstruction; turn engine off, inspect attachment and tractor, repair any damage before resuming operation.

- Disengage power to attachment, stop engine, remove key, and wait for all movement to stop before dismounting or making adjustments.
- Never transport attachment with PTO running.
- Watch for traffic when operating near or crossing roadways.
- This unit is not equipped for highway use, especially when safety lighting and marking is required. It is not a recreational vehicle.
- This unit is not equipped with a drawbar. Do not pull loads.
- Handle fuel carefully it is highly flammable. Always use an approved container. Never remove fuel cap or add fuel while engine is running. Allow engine to cool two minutes before refueling. Do not spill fuel on hot engine parts.
- Take all possible precautions when leaving tractor unattended: disengage PTO, lower attachment, place controls in neutral, set parking brake, stop engine, and remove key from ignition.
- Move very slowly when attachment is removed. Never carry passengers.

MAINTENANCE SAFETY

- Disconnect battery ground cable (-) before performing maintenance or service if starting engine could cause injury.
- Never work under equipment without safety blocks.
- Keep engine free of grass, leaves, or excess grease to reduce fire hazard and minimize engine overheating.
- Do not change engine governor settings.
- Keep tractor and attachment in good operating condition and all safety devices in place.
- Periodically tighten all bolts, nuts and screws. Check that all cotter pins are properly installed to ensure equipment is in a safe condition.

STORING SAFELY

- Never store equipment with gasoline in the tank inside a building where fumes may reach an open flame, spark or pilot light as on a furnace, water heater, clothes dryer, or other gas appliance. Allow engine to cool before storing in an enclosure.
- Always provide adequate ventilation when running engine indoors. Exhaust gases contain carbon monoxide, an odorless and deadly poison.
- Remove attachment from tractor. Remove all accumulated debris from attachment and tractor .
- Sand areas where paint is chipped and repaint to prevent rust. Lubricate all locations to prevent moisture damage during storage.

GENERAL INFORMATION

The purpose of this manual is to assist the operator in maintaining and operating **GRASSHOPPER** tractors. Read it carefully. It furnishes information and instructions that will help you achieve years of dependable performance.

These operating and maintenance instructions have been compiled from extensive field experience and engineering data. Some information may be general in nature due to unknown and varying conditions. However, through experience and these instructions you should be able to develop operating procedures suitable to your particular situation.

The illustrations and data used in this manual were current at the time of printing, but due to possible in-line production changes your machine may vary slightly in detail. **GRASSHOPPER** reserves the right to redesign and change the machine as necessary without notification.

⚠ WARNING

Some illustrations in this manual show the Aera-vator with safety shields removed to provide a better view. The Aera-vator should never be operated with any safety shielding removed.

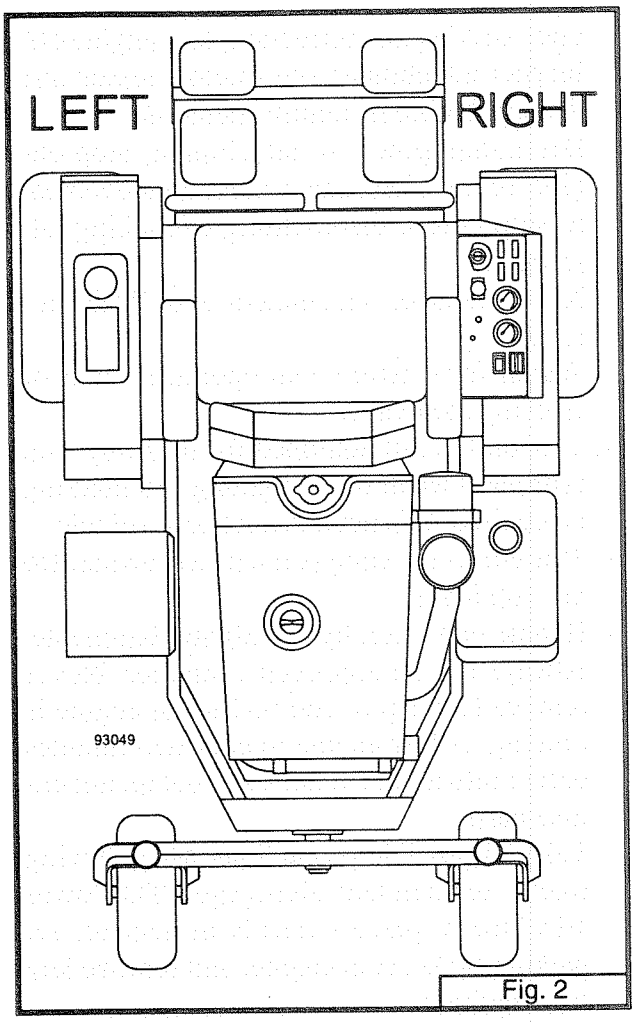

Fig. 2

Throughout this manual, references are made to right and left directions. These are determined by standing at the rear of the equipment and facing the direction of forward travel.

440 ELECTRIC LIFT WIRING HARNESS INSTALLATION

(refer to illustration page 23)

NOTE: The wiring harness provides a feature that shuts off the Aera-vator when it is in a raised position.

- Locate the relay bracket (item 13) and bolt it beneath the seat front cross member in the center. Mount two relays (item 5) to this bracket. Secure each with a .5-20 x .5 whiz bolt and nut.
- Bolt the third relay inside the tractor frame, on the left side, across from the engine and secure with a .5-20 x .5 whiz bolt and nut. A .312 diameter hole is located near the top of the frame. On some models the battery box is fastened through this hole, in which case remove the .25 nut, mount the relay, and secure with nut.
- Plug in the relay connector (item 6) to the relay mounted inside the frame and route the three brown wires with two plugs (items 10 & 11) toward the clutch. Unplug the clutch from the tractor's wiring harness. Insert two plugs (items 10 & 11) in the Aera-vator's wiring harness between the two connectors of the clutch plug.
- Locate the other two relay connectors (items 6) and plug them into the two relays mounted under the seat. Route the two wires with the yellow eyelets toward the battery. DO NOT connect at this time.
- Remove the bottom panel from the control console and mount the toggle switch (item 7) in the control panel. Place notched side of stem up. Route the black with white wire from the left relay, mounted under the seat, into the console and connect to the toggle switch as shown. Locate the yellow with brown wire from the eight way female connector (item 3) and route it into the console and connect to toggle switch.
- Locate the 8 inch black wire with the 4 inch black wire. Connect the 8 inch wire to the toggle switch and an accessory fuse slot. Place the 7.5 amp auto fuse in fuse slot. If all accessory fuse slots are used locate the 5 inch black wire and connect the toggle switch to the "pig tail" wire from an accessory fuse slot.
- Locate the green wire from the relay mounted on the tractor frame. Route it to the back of the control console, through the console, and out the front inside the tractor frame connecting it to the 8 way female connector. The 8 way connectors should be located under the seat, near the right front of the tractor frame.
- Now route the wires from the 8 way male connector out the front of the tractor between the right fender and the seat.
- Connect the 4 way female connector (item 1) to the switch interlock (item 14) mounted on the Aera-vator's lift kit.
- Connect the 27 inch yellow and green wires to the normally closed post on top of the switch (item 15) and the green with yellow wire to the common post on the bottom of switch (item 15).
- Slide an eyelet insulator (item 18) over the eyelet on the purple wire and connect wire to the electric winch on the post nearest the tractor. Slide an eyelet insulator (item 18) over the eyelet on the blue wire and connect to the electric winch on the post nearest the Aera-vator. Cover posts with eyelet insulators.
- Cover the wires from the tractor to the electric winch with the flex loom provided. Also cover the wires between the two relays, under the seat, and the 8 way connectors with flex loom. Secure flex loom with wire ties.
- Make sure all wires have been routed in such a manner as to stay clear of any moving parts. Use wire ties to secure wires in place.
- Reinstall the bottom panel in the control console.
- Connect the two wires routed to the battery to battery posts. Connect the red with white wire to the positive (+) post and the green with yellow wire to the negative (-) post.

440 OR 660 HYDRAULIC LIFT WIRING HARNESS INSTALLATION

(refer to Fig. 3)

NOTE: The wiring harness provides a feature that shuts off the Aera-vator when it is in a raised position.

- Locate two purple wires inside flex loom and connect the eight-way male clear plug to the eight-way female black plug from the universal tractor harness. Connect the opposite end, with the four-way black plug, to the switch mounted on the Aera-vator assembly.
- Finally, make certain all wires have been routed to stay clear of all moving parts.

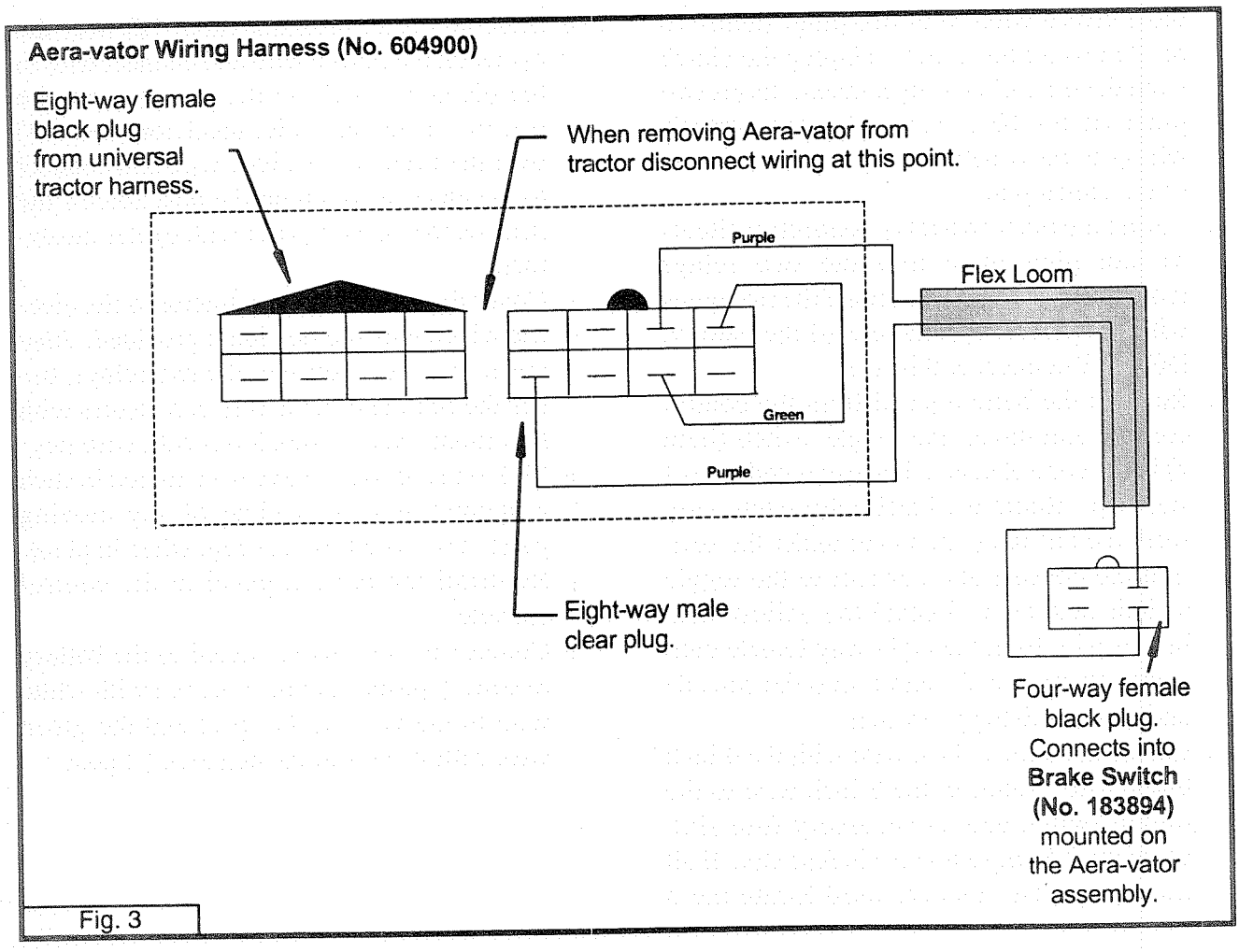

Fig. 3

440 AERA-VATOR ASSEMBLY INSTALLATION

(refer to illustration page 13, 14, or 15 and Fig. 4)

- Locate and slide the lift mount assembly into the openings of the tractor's front supports. Secure the mount arms (item 2 & 3, page 14 or 15) in position with the .25 x 2 inch bolts provided.
- On the Aera-vator housing assembly, pull out on the spring loaded mount latch pins (item 1, Fig 4) and rotate 90° so that they are in an open position.

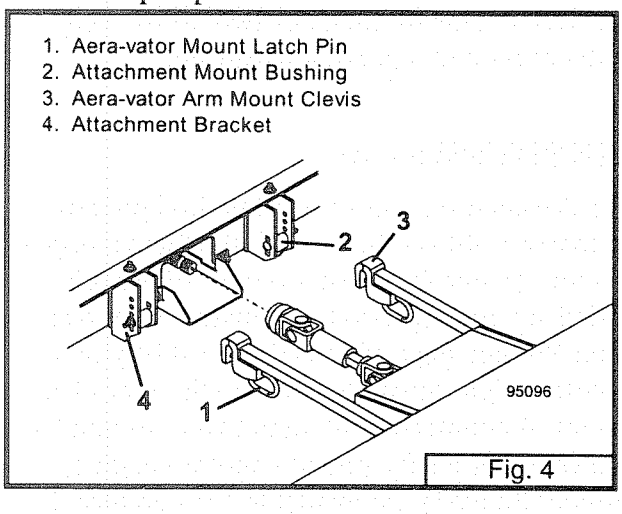

Fig. 4

- Install the nylon bushings (item 2, Fig. 4) into the second hole from the bottom of the attachment brackets (item 4, Fig 4).
- Attach Aera-vator housing assembly to tractor by placing the arm mount clevises (item 3, Fig 4) over the nylon bushings bolted into the attachment brackets.
- Rotate the mount latch pins 90° to a closed position to lock the arm mount clevises in place.
- If installing a unit with an electric lift;
  - ➨ Attach the lift straps (item 8, page 14) to the eye bolts (item 13, page 14) and mount eye bolts in the back of the Aera-vator housing (item 2, page 13). Secure each eye bolt with two .375 whiz nuts (item 14, page 14).
  - ➨ Install switch box (item 26, page 14) under the right arm rest. Remove front bolt from right arm rest and install stop clip (item 30, page 14). Do not tighten bolt.
  - ➨ Remove rear bolt from right arm rest and install switch box mounting bracket (item 31, page 14). Place narrow end of mounting bracket toward the front. Secure bracket by sliding .312-18 x 1.5 bolt (item 35, page 14) through flat washer, spacer, and spring and into bottom of arm rest.
  - ➨ Slide the switch box onto the mounting bracket. Adjust stop clip to hold switch box from sliding off bracket. Secure stop clip.
  - ➨ To remove switch box, force the rear of mounting bracket toward the arm rest and slide off bracket.
  - ➨ Drill .25" diameter hole in seat bottom panel's side approximately 4.25" ahead of seat latch mount pin. Install nylon wire harness clip and secure wire harness. Route harness between seat and control console.

  If installing a unit with an hydraulic lift;
  - ➨ Attach the bolt-on lift brackets (item 9, page 15) to the back of the Area-vator housing (item 2, page 15). Secure each bracket with two .375-16 x 1 whiz bolts and nuts. Attach the lift chains to clevis pins (item 10, page 15) in the back of the bolt-on lift brackets; connecting the clevis pin to the fourth chain link from the top to achieve the recommended amount of lift. Secure clevis pins with hair pins (item 11, page 15).
- Connect the PTO shaft ensuring the quick disconnect is securely locked on the splined power shaft.
- Be sure all fasteners on the Aera-vator and mounts are secure and all shields are in place before operating the unit.

660 AERA-VATOR ASSEMBLY INSTALLATION

(refer to illustration page 17, and Fig. 4)

- Locate and slide the lift mount assembly (items 23 - 30) into the openings of the tractor's front supports. Secure the mount arms in position with the .25 x 2 inch bolts provided.

- On the Aera-vator housing assembly, pull out on the spring loaded mount latch pins (item 1, Fig. 4) and rotate 90° so that they are in an open position.
- Install nylon bushings (item 4, Fig. 4) into the second hole from the bottom of the attachment brackets (item 1, Fig. 4).
- Attach Aera-vator housing assembly to tractor by placing the arm mount clevises (item 3, Fig. 4) over the nylon bushings bolted into the attachment brackets.
- Rotate the mount latch pins 90° to a closed position to lock the arm mount clevises in place.
- Attach the lift chains to clevis pins (item 42) in the Aera-vator housing assembly; connecting the clevis pin to the fourth chain link from the top to achieve the recommended amount of lift. Secure clevis pins with hair pins (item 43).
- Connect the PTO shaft ensuring the quick disconnect is securely locked onto the splined power shaft.
- Be sure all fasteners on the Aera-vator and mounts are secure and all shields are in place before operating the unit.

⚠ CAUTION

Be sure all safety shields are in place before operating this machine.

⚠ DANGER

Always keep hands and feet away from all moving parts while the Aera-vator is running.

MAINTENANCE OF AERA-VATOR

The Aera-vator's bearings are sealed and permanently lubricated requiring no routine maintenance. Check the oil level in the gearbox periodically. Maintain oil level to the bottom of fill plug hole. Use SAE 90 oil.

Lubricate the power shaft (three fittings) every eight hours of usage. Use an SAE multipurpose type grease. Be sure to clean fittings thoroughly before using grease gun. Do not let excess grease collect on or around parts.

The rotor drive belt, located under the belt shield on the right side of the Aera-vator housing, should be checked for proper tension periodically. Be sure to reinstall the belt shield after servicing.

AERA-VATOR WEIGHT

(refer to illustration page 24)

If addition weight is desired on the Aera-vator housing an Aera-vator Weight Kit (part number 503901) may be purchased from your Grasshopper dealer. This kit includes two 50 lb. weights with covers and mounting hardware.

COUNTERWEIGHT

The Aera-vator requires one-hundred pounds of counterweight on the rear of the Grasshopper tractor. If one-hundred pounds of weight is added on the Aera-vator housing (see Aera-vator Weight, page 10) an additional fifty pound counterweight must be added to the rear of the tractor. A counterweight mount kit (part number 503220) and a fifty pound counterweight (part number 323951) are available for purchase for 700 and 900 series tractors.

⚠ WARNING

Additional weight must be installed on rear of tractor when operating an Aera-vator. See counterweight text above for exact amount of weight required.

440 AERA-VATOR ASSEMBLY

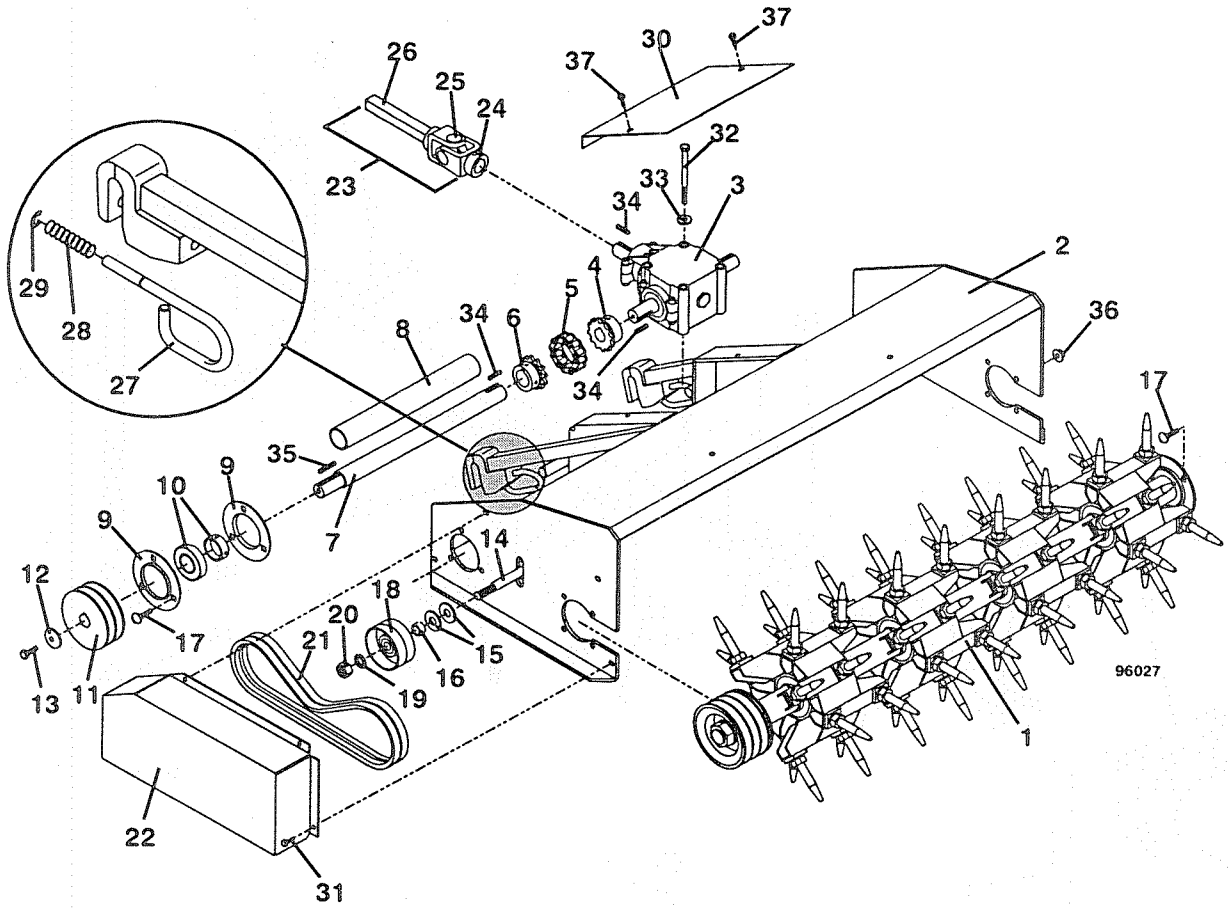

Item No.	Order No.	Description	Item No.	Order No.	Description
1	100040	Rotor Shaft Assembly 40"	20	254490	Nut .625-11
2	644341	Housing - 440 Aera-vator	21	382750	Belt
3	390254	Gear Box	22	644741	Belt Shield
4	418425	Sprocket Coupler - 1"	23	398518	Universal Half Shaft
5	388300	Chain Coupler	24	401013	Yoke 1"
6	418427	Sprocket Coupler - 1.25"	25	121010	Cross & Bearing
7	883266	Power Shaft	26	402604	Yoke & Shaft
8	822681	Shaft Shield	27	730433	Latch Pin
9	124530	Flangette - 3 Bolt	28	283285	Spring Compression
10	120102	Ball Bearing 1.25 w/lock coller	29	263490	External Retainer
11	831525	Sheave - 2 Groove	30	722291	Shield - Gear Box
12	257041	Cupped Washer	31	253175	Whiz Bolt .25-20 x .75
13	243331	Bolt .375-24 x 1		253025	Whiz Nut .25-20
14	243840	Bolt .625-11 x 3.5	32	243394	Bolt .375-16 x 4.5
15	257080	Washer .625	33	257040	Washer .375
16	902415	Spacer .469	34	281586	Square Key .25 x 1.125
17	247253	Carriage Bolt .375 x 1	35	281585	Square Key .25 x 2.75
18	393175	Idler	36	253043	Whiz Nut .375-16
19	257452	Lock Washer .625	37	253173	Whiz Bolt .25-20 x .5

440 AERA-VATOR ELECTRIC LIFT ASSEMBLY

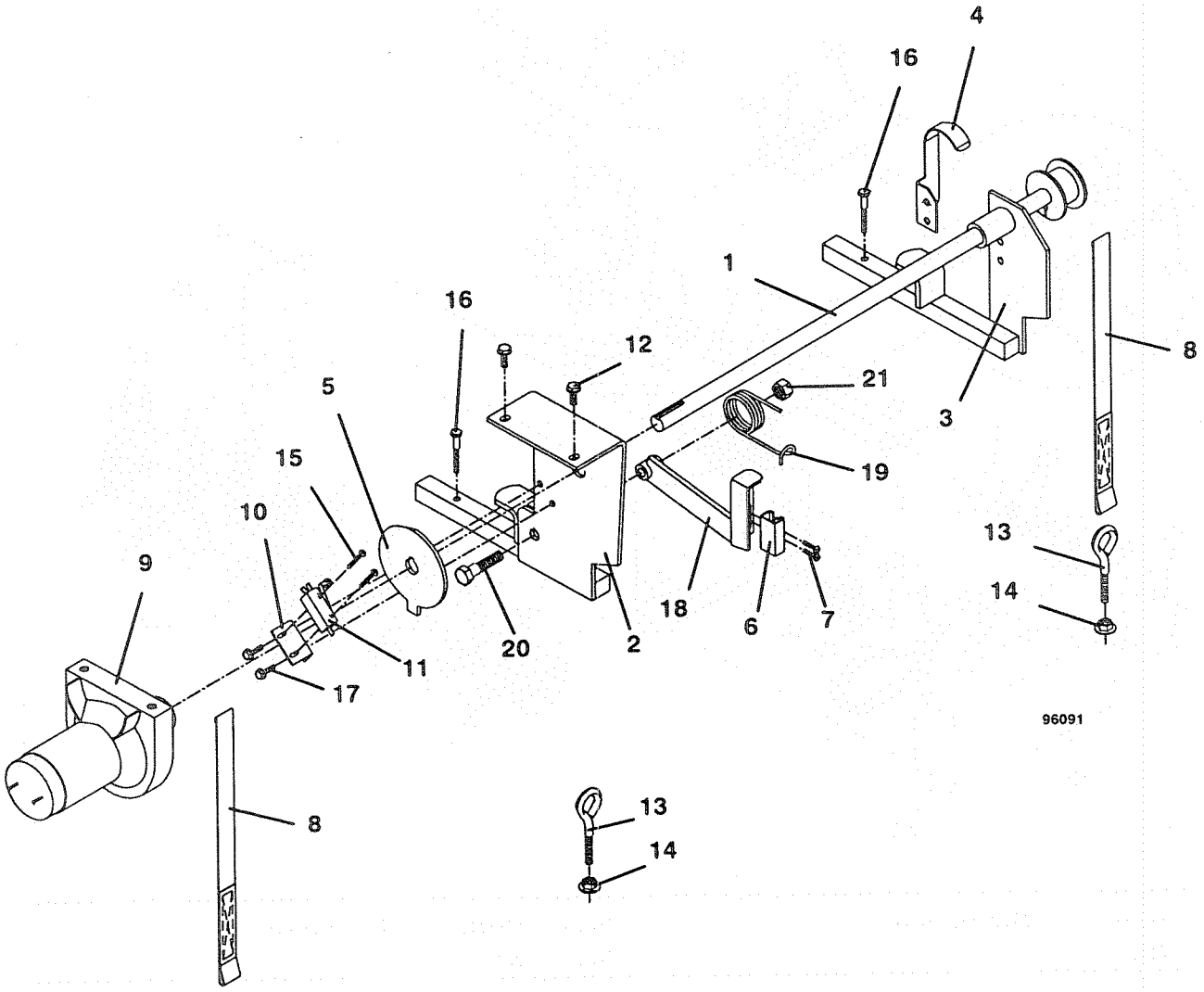

Item No.	Order No.	Description	Item No.	Order No.	Description
	503316	440 Aera-vator Electric Lift Kit	12	253192	Whiz Bolt .312-18 x .75
1	644507	Lift Linkage - Aera-vator Strap	13	240058	Eye Bolt .375-16 x 2
2	644558	Lift Linkage Mount - Rt.	14	253043	Whiz Nut .375-16
3	644557	Lift Linkage Mount - Lt.	15	250318	Machine Screw 6-32 x 1
4	722063	Lift Strap Guard		254400	Nut 6-32
5	775083	Disk - Switch Activator	16	243040	Bolt .25-20 x 2
6	183894	Switch Brake Interlock		604917	Wire Assembly
7	250258	Machine Screw 10-24 x .75			*(see illustration on page 23)*
	257372	Lock Washer .187	17	253176	Whiz Bolt .25-20 x .5
	254421	Nut 10-24	18	644770	Switch Mount - Lift
8	420104	Lift Strap	19	284425	Torsion Spring
9	604515	Lift Drive Assembly	20	243580	Bolt .5-13 x 2
10	720127	Switch Mount	21	253930	Lock Nut .5-13
11	183862	Switch - Leaf Roller			

440 AERA-VATOR HYDRAULIC LIFT ASSEMBLY

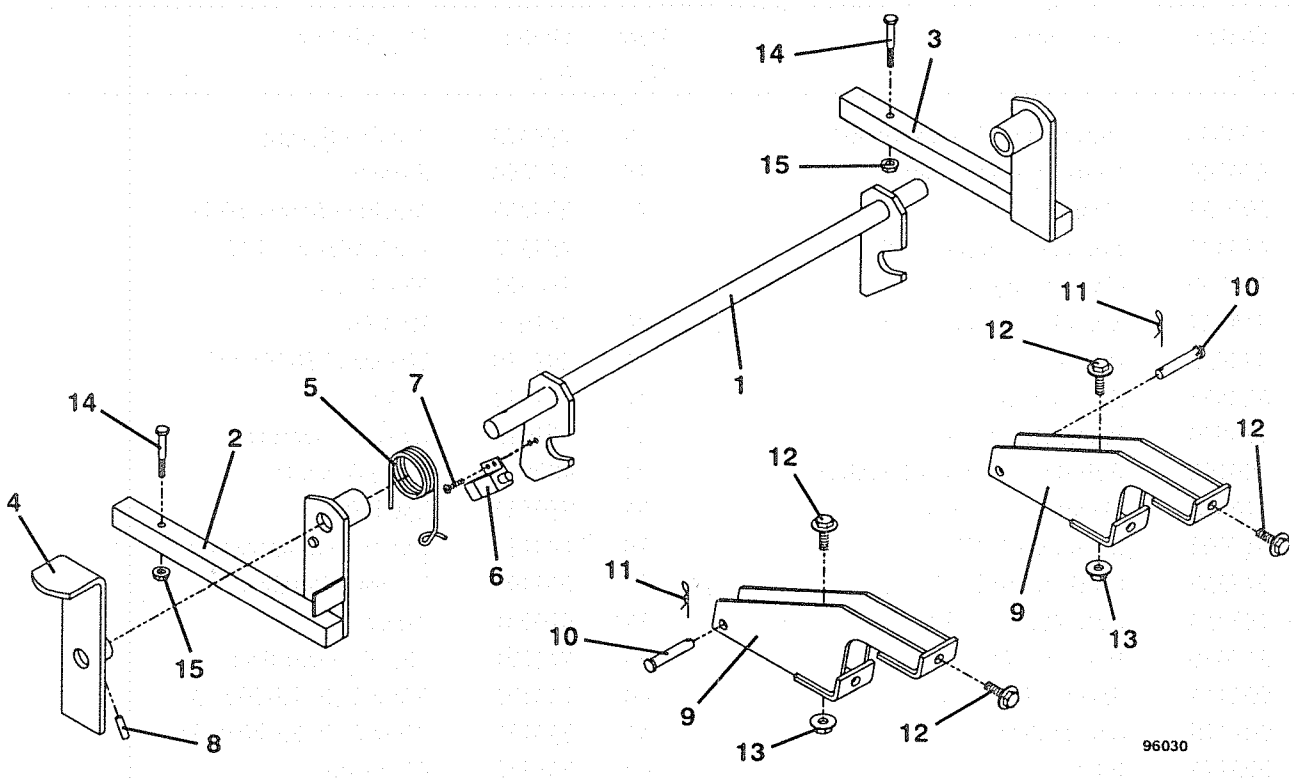

Item No.	Order No.	Description	Item No.	Order No.	Description
	503318	440 Aera-vator Hydraulic Lift Kit	8	261008	Roll Pin
1	644315	Hanger	9	644102	Bolt On Lift Bracket
2	644508	Lift Mount - Rt.	10	261362	Clevis Pin .375 x 3
3	644509	Lift Mount - Lt.	11	260523	Hair Pin .094 x 2
4	643852	Trip Lever	12	253203	Whiz Bolt .375-16 x 1
5	284425	Torsion Spring	13	253043	Whiz Nut .375-16
6	183894	Switch	14	243040	Bolt .25-20 x 2
7	250258	Machine Screw 10-24 x .75	15	253025	Whiz Nut .25-20
	257372	Lock Washer .187		604916	Wire Assembly
	254421	Nut 10-24			(see illustration on page 10)

660 AERA-VATOR ASSEMBLY

Item No.	Order No.	Description	Item No.	Order No.	Description
1	100050	Rotor Shaft Assembly 60"	27	284425	Torsion Spring
2	644340	Housing - Aera-vator	28	183894	Switch
3	390254	Gear Box	29	250258	Machine Screw 10-24
4	418425	Sprocket Coupler - 1"		257372	Lock Washer .187
5	388300	Chain Coupler		254421	Nut 10-24
6	418427	Sprocket Coupler - 1.25"	30	261008	Roll Pin
7	883422	Power Shaft	31	398518	Universal Half Shaft
8	822683	Shaft Guard Tube	32	401013	Yoke 1"
9	124530	Flangette - 3 Bolt	33	121010	Cross & Bearing
10	120102	Ball Bearing w/Lock Collar	34	402604	Yoke & Shaft
11	416450	Sheave - 3 Groove	35	730433	Latch Pin
12	417003	Bushing - 1.25"	36	283285	Spring - Compression
13	247253	Carriage Bolt .375 x 1	37	263490	External Retainer
14	243855	Bolt .625-11 x 4.5	38	420901	Tread
15	257080	Washer .625	39	722291	Shield - Gear Box
16	902415	Spacer .469	40	253173	Whiz Bolt .25-20 x .5
17	902425	Spacer .875	41	253175	Whiz Bolt .25-20 x .75
18	393175	Idler	42	261362	Clevis Pin
19	257452	Lock Washer .625	43	260523	Hair Pin
20	254490	Nut .625-11	44	243394	Bolt .375-16 x 4.5
21	382750	Belt (3 required)	45	257040	Washer .375
22	644740	Belt Shield	46	281586	Square Key .25 x 1.125
23	644315	Hanger	47	281585	Square Key .25 x 2.75
24	644508	Lift Mount - Rt.	48	253043	Whiz Nut .375-16
25	644509	Lift Mount - Lt.	49	243040	Bolt .25-20 x 2
26	643852	Trip Lever	50	253025	Whiz Nut .25-20

660 AERA-VATOR ASSEMBLY

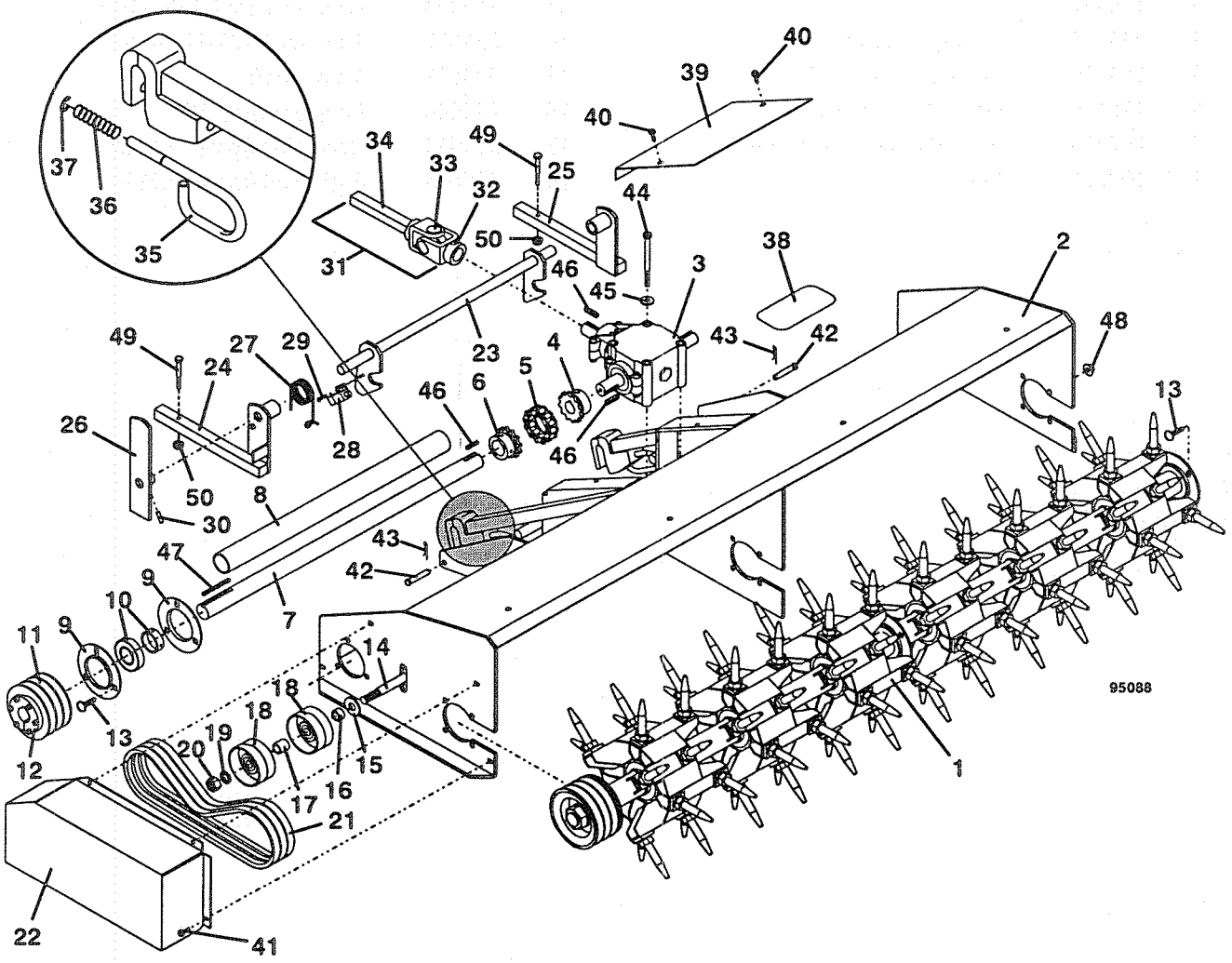

440 ROTOR ASSEMBLY

Item No.	Order No.	Description	Item No.	Order No.	Description
	100040	Rotor Shaft Assembly	9	254494	Nut .625-18
1	325605	Rotor Assembly w/o Tines	10	124535	Flangette - 4 Bolt 72 mm
		(includes items 2-6)	11	120090	Bearing - Hex Bore w/LC
2	325610	Rotor	12	416455	Sheave - Hex Bore 2 Grv.
3	120325	Bearing	13	257495	Lock Washer 1.125" Gr. 8
4	325615	Bearing Adapter	14	254532	Jam Nut 1.125-12 Gr. 8
5	263250	Internal Retainer 3"	15	325618	Rotor Shaft
6	126455	External Rotor Seal	16	325640	Long Spacer 7.25"
7	257453	Lock Washer .625" Grade 8	17	325635	Drive End Spacer 3.812"
8	100065	Tine	18	325625	Right End Spacer 3.312"

440 ROTOR ASSEMBLY

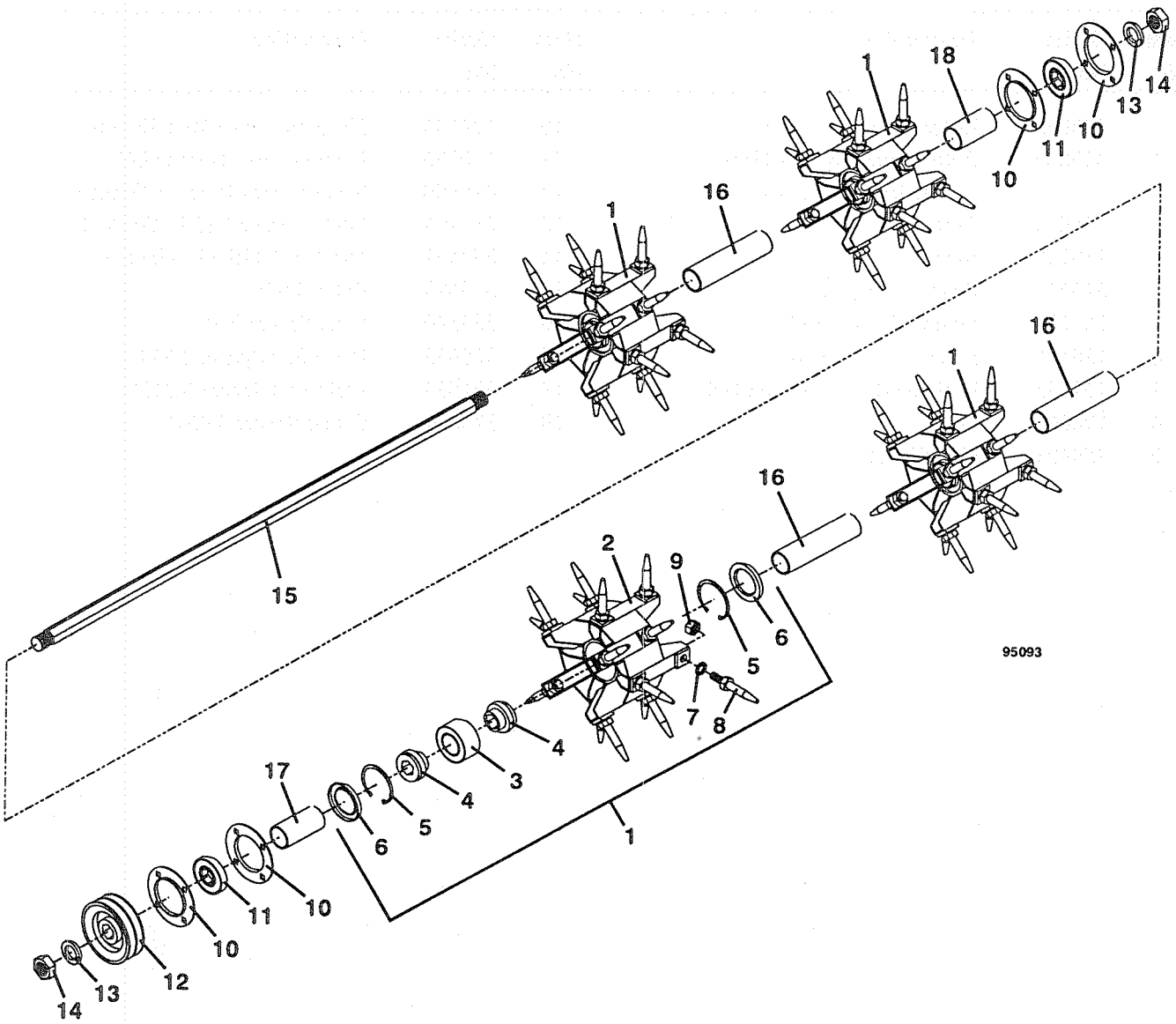

660 ROTOR ASSEMBLY

Item No.	Order No.	Description	Item No.	Order No.	Description
	100050	Rotor Shaft Assembly	10	124535	Flangette - Four Bolt 72 mm
1	325605	Rotor Assembly w/o Tines	11	120090	Bearing - Hex Bore w/LC
		(includes items 2 - 6)	12	416460	Sheave - Hex Bore - 3 Groove
2	325610	Rotor	13	257495	Lock Washer 1.125 - Grade 8
3	120325	Bearing	14	254532	Jam Nut 1.125-12 - Grade 8
4	325615	Bearing Adapter	15	325620	Rotor Shaft
5	263250	Internal Retainer 3"	16	325640	Long Spacer 7.25"
6	126455	External Rotor Seal	17	325635	Drive End Spacer 3.812"
7	257453	Lock Washer .625 - Grade 8	18	325625	Right End Spacer 3.312"
8	100065	Tine	19	325630	Center Spacer 3.437"
9	254494	Nut .625-18			

660 ROTOR ASSEMBLY

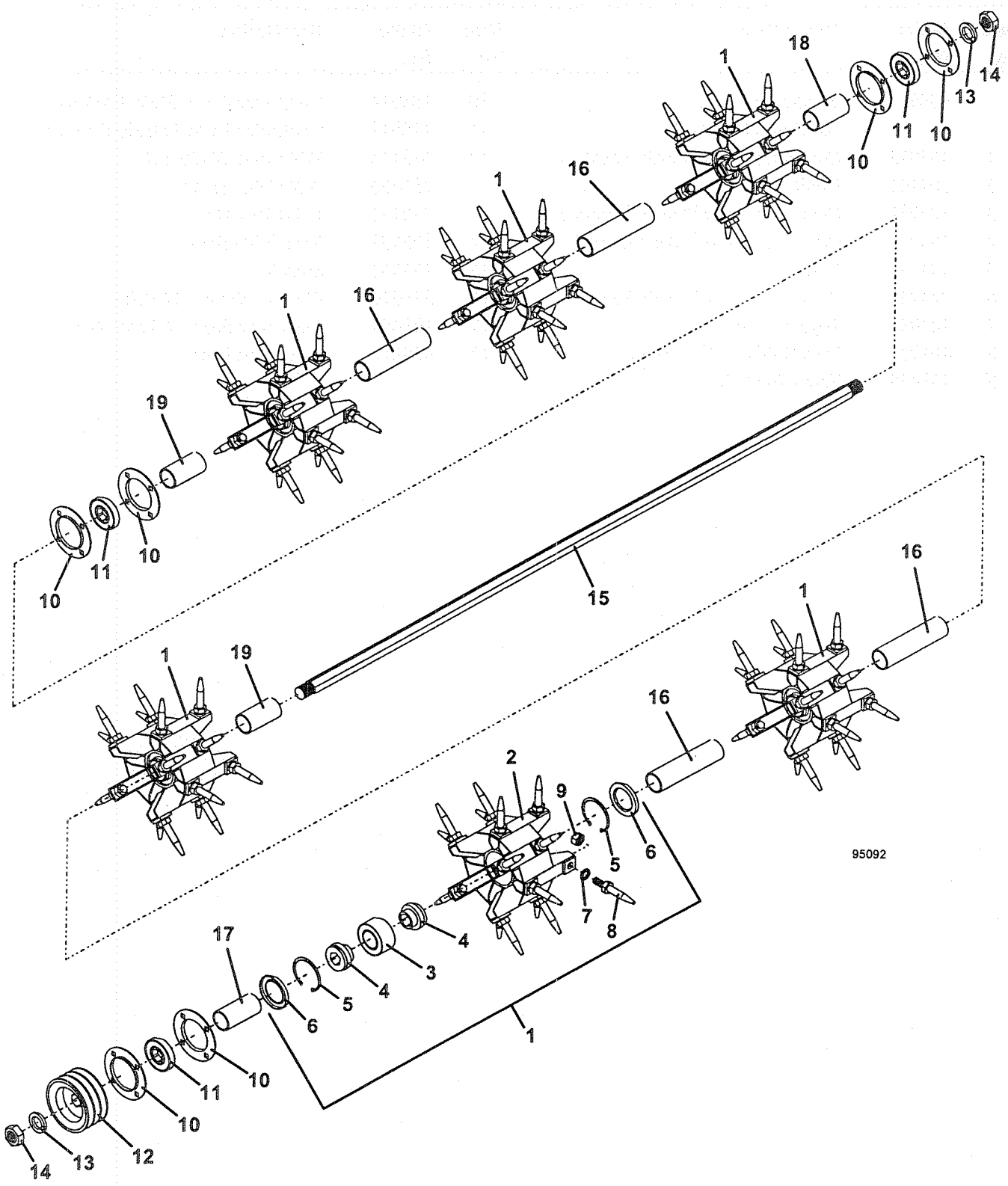

440 WIRING ASSEMBLY

Item No.	Order No.	Description	Item No.	Order No.	Description
	604917	Wiring Assembly	10	184918	Connector 2 way Male Terminal
		(includes item 1-11)	11	184917	Connector 2 way Female Terminal
1	184923	Connector 4 way Female Terminal	12	253173	Whiz Bolt .25-20 x .5
2	202105	Diode		253025	Whiz Nut .25-20
3	184939	Connector 8 way Female Terminal	13	720141	Relay Bracket
4	184940	Connector 8 way Male Terminal	14	183892	Switch Interlock
5	184271	Relay	15	183862	Switch
6	184926	Connector 5 way Female Terminal	16	284610	Electric Winch - 12 volt
7	184083	Toggle Switch	17	181460	Accessory Fuse - 7.5 amp Auto
8	181735	Fuse Holder - Inline Auto	18	425217	Eyelet Insulator
9	181475	Fuse - Auto 40			

440 WIRING ASSEMBLY

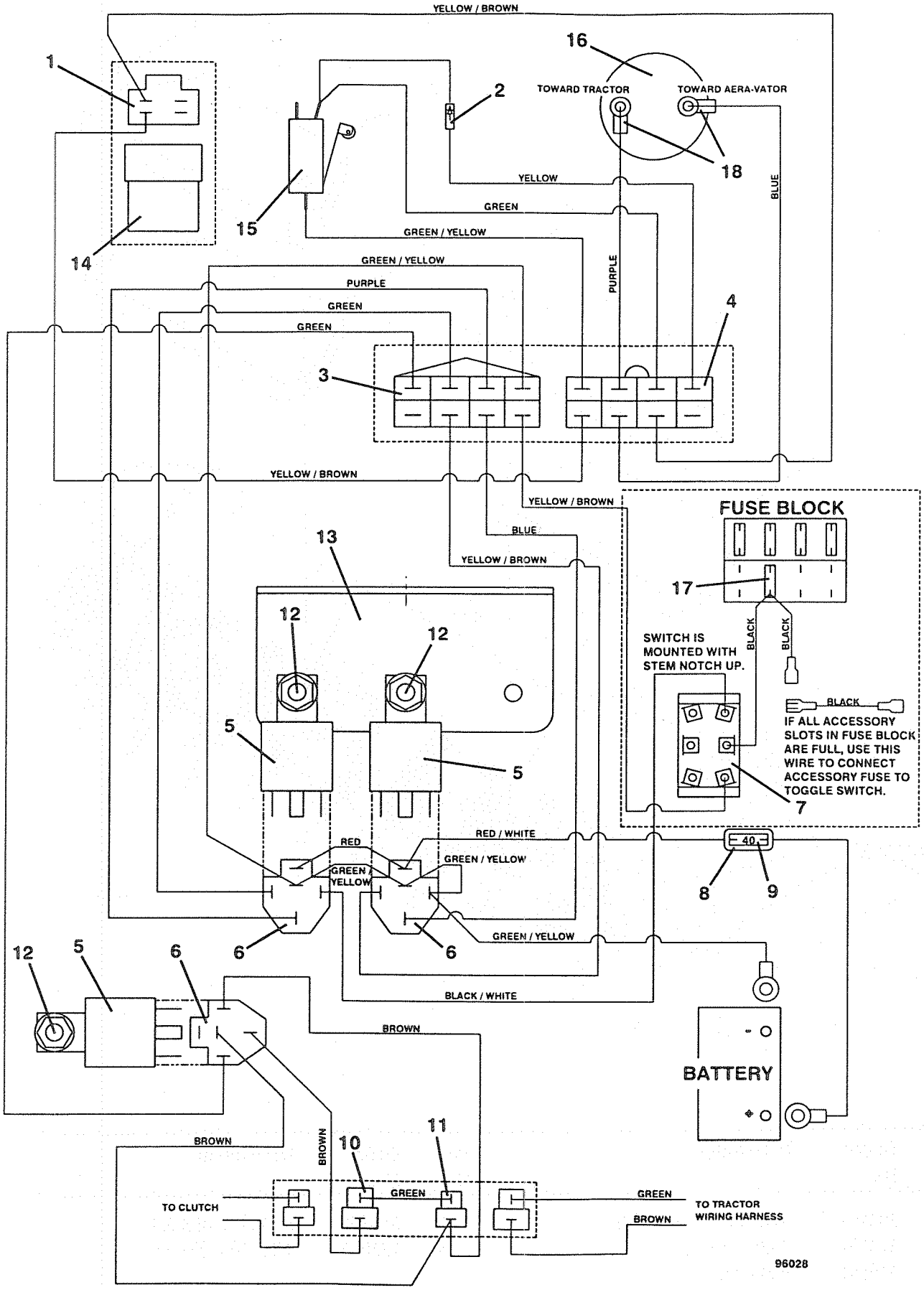

AERA-VATOR WEIGHT KIT

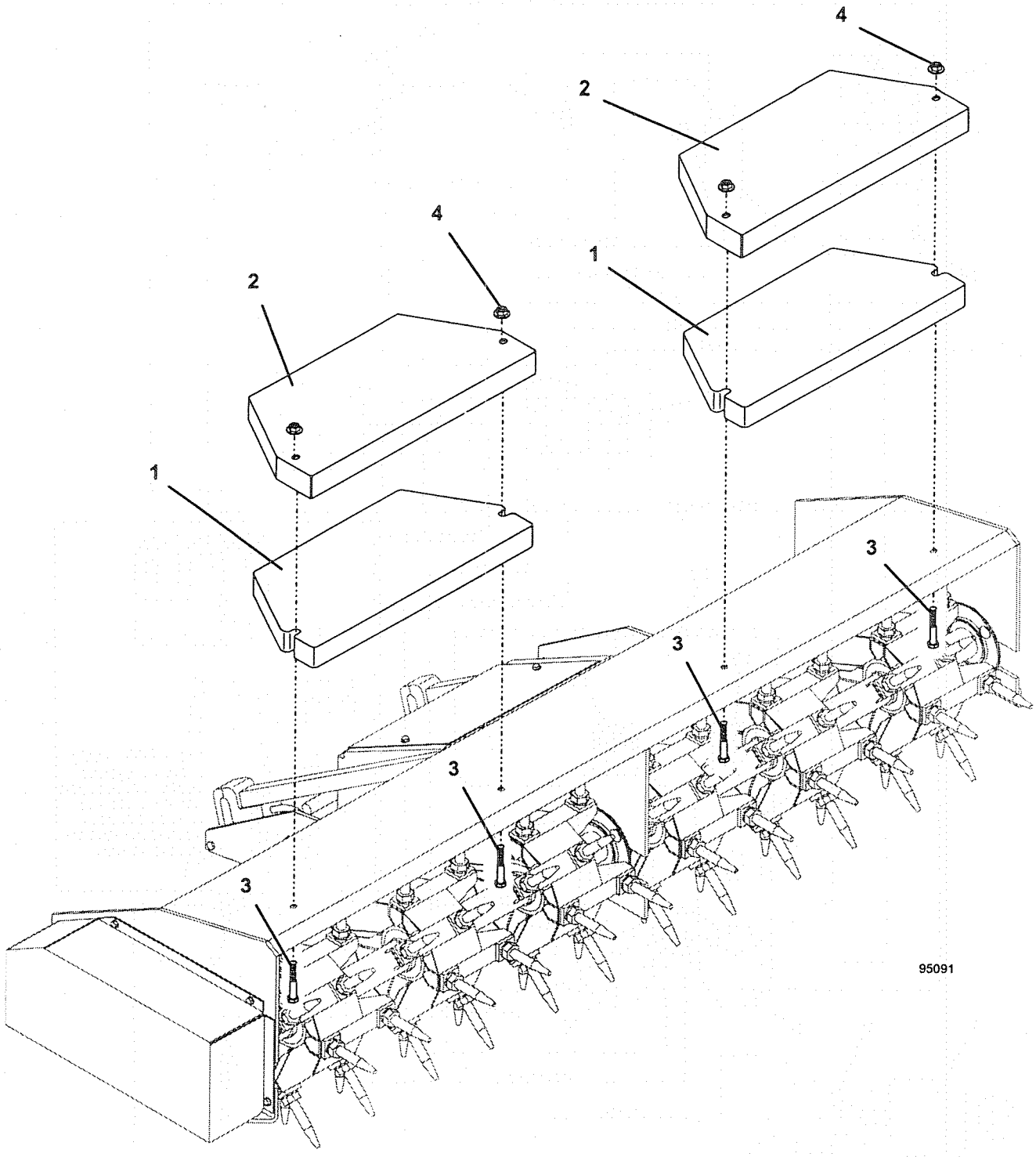

Item No.	Order No.	Description	Item No.	Order No.	Description
	503901	Aera-vator Weight Kit	3	243356	Bolt .375-16 x 2.5
1	323951	Weight 50 lbs.	4	253043	Whiz Nut .375-16
2	729691	Weight Cover			